DEPARTMENT OF PUBLIC WORKS
TOWN OF MILFORD, NH

INFRASTRUCTURE DESIGN, CONSTRUCTION & ADMINISTRATION STANDARDS

April 5, 2010

Table of Contents

APRIL 5, 2010 ..... **1**
TOWN OF MILFORD TELEPHONE LISTINGS 8
ARTICLE I: GENERAL CONSTRUCTION ADMINISTRATION ***9***
1.01 Introduction **9**
1.02 Contact Lists **9**
1.03 Water and Sewer Regulations/Water Utilities Regulations **10**
1.04 Blasting & Cistern Specifications and Information **10**
1.05 Website **10**
1.06 As-Builts **10**
1.07 Approved Plans **10**
1.08 Stormwater Permit **10**
1.09 Project Completion Surety **11**
1.010 Construction Monitoring **11**
1.011 Construction Monitoring Inspection Fees **12**
1.012 Erosion Control Inspection Fees **12**
1.013 Street Opening Permit **12**
1.014 Driveway Permit **13**
1.015 Roadway Construction **13**
1.016 Preconstruction Meeting **14**
1.017 Quality of Work **14**
1.018 Roadway Inspections **15**
1.019 Stormwater Management and Erosion Control Regulations **15**
1.020 Notice of Intent **15**
1.021 Certificate of Occupancy **15**
1.022 Recommendation of Acceptance and Certificate of Final Completion **16**
1.023 Waivers and Appeals **16**
ARTICLE II: ROADWAY AND TRENCHING CONSTRUCTION ***17***
2.01 GENERAL CONSTRUCTION **17**
2.01.1 Description of Work 17
2.01.2 References and Standards 17
2.01.3 Work Sequence 17
2.01.4 Use of Premises 18
2.01.5 Execution 18
2.02 TRAFFIC CONTROL **18**
2.02.1 Requirements 18
2.02.2 Products 18
2.02.3 Permits 18
2.02.4 Removal 18
2.03 CLEARING AND GRUBBING **19**
2.03.1 General 19
2.03.2 Regulatory Requirements 19
2.03.3 Protection 19
2.03.4 Clearing and Grubbing 19
2.03.5 Pruning Trees 20
2.03.6 Removal 20
2.04 DEWATERING **20**

2.04.1 System Performance Requirements 20
2.04.2 Additional Provisions 21
2.04.3 Execution 21
2.04.4 Job Conditions 22
2.05 EXCAVATION SUPPORT 22
2.05.1 Work Included 22
2.05.2 Reference Standards 22
2.05.3 System Description 22
2.05.4 Materials 22
2.05.5 Execution 23
2.05.6 Sheeting Left-In-Place 23
2.06 SITE PREPARATION 23
2.06.1 Work Included 23
2.06.2 Preparation 24
2.06.3 Topsoil Excavation 24
2.06.4 Subsoil Excavation 24
2.06.5 Tolerances 25
2.07 LEDGE AND BOULDER EXCAVATION 25
2.07.1 Work Included 25
2.07.2 Definitions 25
2.07.3 Ledge and Boulder Blasting Submittal Requirements 25
2.07.4 Limits of Ledge and Boulder Excavation 25
2.07.5 Notification 26
2.07.6 Blasting 26
2.07.7 Disposal and Removal of Ledge and Boulders 26
2.07.8 Backfilling Ledge and Boulder Excavations 26
2.08 EXCAVATING, BACKFILLING AND COMPACTING 26
2.08.1 Work Included 26
2.08.2 Reference Standards 27
2.08.3 Samples 27
2.08.4 Testing 27
2.08.5 Project Record Documents 27
2.08.6 Materials - General 27
2.08.7 Filter Fabric 30
2.08.8 Preparation of Site 30
2.08.9 Protection 30
2.08.10 Topsoil Excavation 30
2.08.11 Pavement Excavation 31
2.08.12 Subsoil Excavation 31
2.08.13 Backfilling Preparation 32
2.08.14 Bedding And Backfilling 32
2.08.15 Backfilling Tolerances 33
2.08.16 Compaction 33
2.08.17 Grading 33
2.08.18 Field Quality Control 34
2.08.19 Schedule Of Bedding, Backfill And Compaction 34
2.09 SLOPE PROTECTION AND EROSION CONTROL 36
2.09.1 Requirements 36
2.09.2 Reference Standards 36
2.09.3 Project Conditions 37

2.09.4 Material Requirements 37
2.09.5 General Construction Sequence To Minimize Erosion 38
2.09.6 Seeding and Mulching 38
2.09.7 Straw Bale Dikes 39
2.09.8 Damage And Repair 39
2.010 ROADWAY STABILIZATION FABRIC 39
2.010.1 Work Included 39
2.010.2 Submittals 39
2.010.3 Manufacturer's Warranty 39
2.010.4 Developer's Guarantee 40
2.010.5 Materials 40
2.010.6 Storage 40
2.010.7 Handling and Placement of Stabilization Fabric 41
2.011 CURBING 41
2.011.1 Description 41
2.011.2 Materials 41
2.011.3 Construction Requirements 41
2.012 BITUMINOUS CONCRETE PAVING 43
2.012.1 Work Included 43
2.012.2 Reference Standards 43
2.012.3 Submittals 44
2.012.4 Materials 44
2.012.5 General Execution Requirements 44
2.012.6 Compaction Testing 45
2.012.7 Equipment 45
2.012.8 Execution of Paving 45
2.012.9 Temporary Trench Patch 46
2.012.10 Permanent Trench Patch 47
2.012.11 Replacement of Course 47
2.012.12 Cleanup 47
2.012.13 Overlay and New Bituminous Pavement For Roads 48
2.012.14 Approvals 48
2.013 SUBSURFACE DRAINAGE SYSTEMS 48
2.013.1 Work Included 48
2.013.2 Reference Standards 48
2.013.3 Pipe Protection 49
2.013.4 Acceptable Manufacturers 49
2.013.5 Pipe Material 49
2.013.6 Fabric 49
2.013.7 Coarse Filter Aggregate 49
2.013.8 Installation 50
2.014 STORM DRAINS 50
2.014.1 Work Included 50
2.014.2 Reference Standards 50
2.014.3 Submittals 51
2.014.4 Quality Control 51
2.014.5 General Products 51
2.014.6 Materials 51
2.014.7 Handling Pipe 52
2.014.8 Control Of Alignment and Grade 52

2.014.9 Excavating Trench and Installing Pipe 53
2.014.10 Jointing Pipe 53
2.015 STEEL BEAM GUARDRAIL 54
2.015.1 Work Included 54
2.015.2 Reference Standards 54
2.015.3 Materials 54
2.016 RESTORATION OF GROWTH - CLASS A (LAWN) 55
2.016.1 Reference Standards 55
2.016.2 Work Included 55
2.016.3 Product Delivery and Storage 56
2.016.4 Materials 56
2.016.5 Execution of Growth Restoration 57
2.016.6 Application Rates 58
2.016.7 Maintenance 58
2.017 RESTORATION OF GROWTH - CLASS B (FIELD) 58
2.017.1 Reference Standards 58
2.017.2 Work Included 58
2.017.3 Product Delivery and Storage 59
2.017.4 Materials 59
2.017.5 General Execution 60
2.017.6 Application Rates 61
2.017.7 Maintenance 62
2.018 TREES AND SHRUBS 62
2.018.1 Work Included 62
2.018.2 Reference Standards 62
2.018.3 Delivery, Storage, and Handling 62
2.018.4 Warranty 63
2.018.5 Materials 63
2.018.6 Preparation 64
2.018.7 Installation 64
2.018.8 Plant Support and Wrapping 65
2.018.9 Maintenance Service 65
2.019 CAST-IN-PLACE CONCRETE 66
2.019.1 Work Included 66
2.019.2 Reference Standards 66
2.019.3 Submittals 66
2.019.4 Quality Assurance 66
2.019.5 Scheduling 66
2.019.6 Cement 67
2.019.7 Aggregates 67
2.019.8 Admixtures 67
2.019.9 Concrete 67
2.019.10 Reinforcing 67
2.019.11 Forms And Accessories 67
2.019.12 General Execution 68
2.019.13 Reinforcing 68
2.019.14 Inspection 69
2.019.15 Concrete Mixing and Placement 69
2.019.16 Concrete Testing 70
2.019.17 Curing 70

2.019.18 Removal of Forms 70
2.019.19 Finishing Concrete 71
2.019.20 Protection 71
2.020 PRECAST CONCRETE CATCH BASINS 71
2.020.1 Work Included 71
2.020.2 Reference Standards 71
2.020.3 Materials and Design 72
2.020.4 Installation 72
2.021 CASTINGS 73
2.021.1 Work Included 73
2.021.2 Reference Standards 73
2.021.3 Quality Control Inspection 73
2.021.4 Acceptable Manufacturers 73
2.021.5 General Products 73
2.021.6 Manhole Frames and Covers 74
2.021.7 Polyliners 74
2.021.8 Catch Basin Frames and Grates 74
2.021.9 Setting Frames, Covers and Grates 74
APPENDIX I: ADMINISTRATIVE DOCUMENTS 75
A. Application For Start of Construction .....
B. Subdivision/Site Plan Improvements Guarantee Worksheet .....
C. DPW Construction Monitoring Approach .....
D. Application/Permit For Street Opening .....
E. Stormwater Permit and Checklist .....
F. Driveway Permit Application .....
G. Inspection Fee Agreement Form .....
H. Release of Inspection Fee .....
I. Cash Escrow Agreement Form .....
J. Bond/Letter of Credit Agreement Form .....
K. Release of Security or Escrow Form .....
APPENDIX II: CONSTRUCTION DESIGN DETAILS 100
A. Catch Basin .....
B. Precast Concrete Catch Basin with Oil Separator .....
C. Catch Basin/Drop Inlet .....
D. Catch Basin Liner .....
E. Torrent Frame and Grate .....
F. Reinforced Concrete Headwall .....
G. Trench Section For Drainage Pipe .....
H. Roadway Section – Granite Curb .....
I. Roadway Section – Open Drainage .....
J. Roadway Section – Closed Drainage .....
K. Circular Cul-De-Sac .....
L. Offset Cul-De-Sac .....
M. Hammerhead Turn-Around .....
N. Tomahawk Turn-Around .....
O. Utility Roadway Cross Section .....
P. Roadway Delineation .....
Q. Ironwood Guardrail .....
R. Pavement Restoration .....
APPENDIX III: ROADWAY STANDARDS CHARTS 119

APPENDIX IV: SEED MIXTURES – NH STORMWATER MANUAL.....121
APPENDIX V: BLASTING & EXPLOSIVE REGULATIONS 123
APPENDIX VI: FIRE CISTERN REQUIREMENTS.....140
APPENDIX VII: RESIDENTIAL DRIVEWAY REGULATIONS 148

TOWN OF MILFORD TELEPHONE LISTINGS

Town of Milford Telephone Listings

Department	Telephone #	Fax #
Administration Department	249-0600	673-2273
Ambulance Service	249-0610	673-4292
Assessing Department	249-0615	673-2273
Building & Code Enforcement Department	249-0620	673-2273
Community Media	249-0670	673-2273
Conservation Commission	249-0628	673-2273
Emergency Management	249-0680	673-2273
Finance Department	249-0640	673-2273
Fire Department	249-0680	673-0657
Human Resources	249-0605	673-2273
Information Technology	249-0612	673-2273
Library	673-2408	672-6064
MACC Base	673-1414	N/A
Planning Board	249-0620	673-2273
Planning Department	249-0620	673-2273
Police Department	249-0630	672-6025
Public Works Department Office	673-1662	673-2206
Public Works Garage	673-1770	N/A
Recreation Department Office	249-0625	673-2273
Selectman's Office	249-0600	673-2273
Tax Collector	249-0655	673-2273
Town Clerk	249-0650	673-2273
Transfer Station Office	673-8939	N/A
Welfare Department	673-3735	672-1077
Water Utilities Department	249-0660	672-1071
Water Office	249-0667	672-1071
Sewer Office	249-0660	672-1071
Zoning Board of Adjustment	249-0620	673-2273

ARTICLE I: GENERAL CONSTRUCTION ADMINISTRATION

1.01 INTRODUCTION

The specifications herein are compiled with the intent of providing the user design and construction specifications for work in the Town of Milford, NH. The specifications in this document include those for roadway, drainage, utilities and fire cistern construction in the Town. Questions should be directed as follows:

Questions regarding:	Direct Questions to:
Road Construction	Director of Public Works
Sewer Works	Water Utilities Superintendent
Fire Cisterns	Fire Prevention Officer
Water Distributions Systems	Water Utilities Superintendent
Code Enforcement/Building inspections	Code Enforcement/Building Inspector
Traffic Control	Police Department and/or NH DOT
Subdivisions/Site Plans	Community Development Department

1.02 CONTACT LISTS

Listed below are Town Department contact names and telephone numbers. This contact list will be issued to all contractors and developers performing construction work in the Town of Milford. At the preconstruction meeting, the contractor, developer and/or owner shall provide a complete contact list of responsible personnel and emergency contact personnel with addresses, cell phone numbers, office telephone and fax numbers and home phone and fax numbers.

General Contacts are as follows:

Milford Department of Public Works (DPW)
Contact: Director of Public Works
289 South Street
Milford, NH 03055-3737
Phone: 673-1662
Fax: 673-2206

Milford Fire Department
Contact: Fire Prevention Officer
39 School Street
Milford, NH 03055
Phone: 249-0680
Fax: 672-6025

Milford Police Department
Contact: Police Chief
19 Garden Street
Milford, NH 03055
Phone: 249-0630
Fax: 673-0625

Milford Water Utilities: Water distribution systems and sewer works
Contact: Superintendent of Water Utilities
564 Nashua Street
Milford, NH 03055
Phone: 249-0660
Fax: 672-1071

Milford Community Development Department: Planning/GIS, Code Enforcement, Building Inspections, Zoning and Health
Contact: Director of Community Development
Milford Town Hall
1 Union Square
Milford, NH 03055
Phone: 249-0620
Fax: 673-2273

NHDOT, District 5
Driveways and utilities in the state highway or ROW
Contact: District Engineer

16 East Point Drive
Bedford, NH03110
Phone: 666-3336

1.03 WATER AND SEWER REGULATIONS/WATER UTILITIES REGULATIONS

This document does not include the Water Department Rules and Regulations or the Sewer Use Ordinance. Said regulations and construction specifications must be obtained from the Milford Water Utilities Department.

1.04 BLASTING & CISTERN SPECIFICATIONS AND INFORMATION

This document includes the Town of Milford Blasting Regulations and Milford Fire Department Fire Cistern Requirements as appendices. Any addition information or questions should be obtained from the Milford Fire Department.

1.05 WEBSITE

Additional Town information may be obtained from the Town web site located at www.milford.nh.gov

1.06 AS-BUILTS

At the completion of the work, the contractor, developer, owner and/or engineer shall submit a set of working drawings (red-lines) and as-built drawings to all applicable departments, as determined by Department of Public Works (DPW) Director. The as-built drawings shall indicate any field adjustments, all buried structures, utilities and services. The as-built drawings shall be submitted to the Community Development Department in triplicate hard copy, 24" x 36" size, and electronically in PDF and AutoCad 2000 or most recent version.

1.07 APPROVED PLANS

Prior to the start of construction, the contractor, developer and/or engineer must provide (6) six sets of approved plans. Site plans and subdivisions plans must be signed by the Planning Board. Facility improvement plans must be approved by the DPW Director. An approved set of plans, signed by the Planning Board or DPW Director, as appropriate, shall be on-site at all times.

During the construction of the project, all changes relating to off-site improvements roadway construction and facilities construction in the Town right-of-way (ROW) or affecting the function of facilities within the Town ROW, must be submitted in writing by the project design engineer for review and approval by either the Community Development Director, or DPW or designated representative, as appropriate.

1.08 STORMWATER PERMIT

Prior to the start of construction of any project in a proposed or existing Town roadway or ROW, the contractor, developer and/or owner is required to submit an application for a

Stormwater Permit, to Community Development for approval by a Code Enforcement Officer. This document must be completed prior to the Preconstruction Meeting.

1.09 PROJECT COMPLETION SURETY

All construction projects that include roadway or utility work within a Town ROW or off-site improvements must have an acceptable completion surety submitted to the Community Development and/or Public Works Department, as applicable. An estimate of any proposed construction work requiring completion surety must be also submitted with the surety, utilizing the Completion Surety Estimate form included in the Administrative Documents section of this document.

As work is completed on a project, the party named on the completion surety may request a reduction of the surety amount to the Community Development and/or Public Works Department, as applicable. The request must be in writing. The request must clearly show the percentages and costs of items completed compared to the original construction cost estimate. The party requesting the reduction in surety is responsible for all costs incurred by the Town to review the reduction.

1.010 CONSTRUCTION MONITORING

Construction monitoring is required on all construction projects, including:

A. Proposed Town roads
B. Proposed private roads
C. Onsite improvements, including utilities or work associated with utilities
D. All off-site improvements
E. All buried utilities

The Town's intent is to have all public and private utility installation work monitored and inspected prior to backfilling. Installation of utilities on private property will be inspected with 24 hours advance notice by the Community Development or Public Works Department, as appropriate. The Town reserves the right to utilize a consultant for this work, if determined necessary by the Town. The project contractor, developer and/or owner will be responsible for consultant construction monitoring costs incurred by the Town.

All construction activity within the Town's roadway, ROW or related easements shall have construction monitoring performed by the DPW or designated representative. Construction monitoring shall be required in accordance with the construction monitoring approach included in the Administrative Documents, Appendix I.

The developer, contractor, owner or utility shall provide a complete construction schedule, including quantities, to DPW. DPW shall then provide an estimate of construction monitoring costs based on the schedule supplied by the developer, contractor, owner or utility. The developer, contractor, owner or utility is responsible for all construction monitoring and administration costs incurred by the Town at the noted rates.

The DPW or designated representative, shall be notified at least two (2) working days prior to the requested time of inspection. The scheduled inspection time shall be confirmed by the inspector. The requirements of this notification are as follows:

- Two (2) working days to not include holidays and weekends.
- Inspectors will be available between 7:00 am and 5:00 pm Monday through Friday.
- No inspections will be made on weekends or holidays, except as approved by the DPW Director.
- Cancellation of scheduled inspection: In cases where the DPW or a designated representative, is not notified that an inspector's services are not required by 12:00 pm (noon) the day prior to the requested inspection, a minimum charge of four (4) hours will be assessed to the requesting person or company.

1.011 CONSTRUCTION MONITORING INSPECTION FEES

Prior to the start of construction for a project required to have construction monitoring performed by a consultant of the Town, the developer, owner, contractor or utility company must provide cash deposits to pay for construction monitoring. The funds shall be placed in an account with the Department of Public Works. The DPW Director shall determine the required initial deposit amount for the Inspection Fee account, based on a construction monitoring estimate. After the initial deposit, the account must be replenished with funds when the account balance falls below $5,000, within 7-days of notice by the DPW.

Any funds unused in the inspection fee account shall be returned to the depositor upon submittal and approval by DPW of a Request for Release of Inspection Fee form, to process a refund of balance.

1.012 EROSION CONTROL INSPECTION FEES

The Departments of Public Works and Community Development reserve the right to require any contractor, developer, owner and/or utility company to provide a cash deposit to be placed in an Inspection Fee account with the Town, which is a surety for placement and maintenance of erosion control measures on any and all projects. The intended use of the Inspection Fee funds will be to pay for the Town to perform, or hire a contractor to perform, placement of and maintenance of erosion control measures not effectively performed on a project by the responsible contractor, developer, owner and/or utility company, after notification of a deficiency by Code Enforcement, DPW Director or designated agent.

The existence and use of this Inspection Fee account in no way relieves the contractor, developer, owner and/or utility company of their responsibilities relating to the proper implementation of effective erosion control requirements, applicable permits, and local, state and federal regulations.

1.013 STREET OPENING PERMIT

An approved Street Opening Permit by DPW is required for all construction activity proposed in a Town roadway, ROW or easement. The permit must be completed and submitted to the Town with the required form of surety one week in advance of any construction activity.

The following are prerequisite conditions to obtaining a Street Opening Permit:

A. Call Dig Safe (1-888-DIG-SAFE or 1-888-344-7233).
B. Posting of the appropriate surety(s).

C. Written notice to, and consent of, authorities with underground structures/utilities in the vicinity of the work.
D. Approval by Police Department for traffic control and warning devices, and a suitable traffic maintenance plan as necessary.
E. Payment of the permit fee.
F. Certificates of insurance and contact persons for ALL contractors working in the street ROW.
G. Inspection and testing fees for installation and restoration (see 1.010 CONSTRUCTION MONITORING for amount determination process).
H. Plan of Street Opening project.

No excavation or other construction will be allowed in the Town roadway, ROW or easement until a Roadway Opening Permit has been issued.

Note: No trenching is allowed in existing roadways after November 1st or before April 15th unless prior approval is given by the DPW Director.

No excavation, open trenches or other construction are allowed in a Town ROW before 7:00 am and after 5:00 pm, or dusk, whichever is earlier, at the discretion of the DPW Director.

1.014 DRIVEWAY PERMIT

An approved Driveway Permit by the DPW, is required for all proposed driveways prior to construction and issuance of Building Permit. Residential driveways must comply with the Residential Driveway Permit Regulations (See Appendix VII).

All driveways must be field inspected and approved by the DPW prior to issuance of a Certificate of Occupancy (CO).

1.015 ROADWAY CONSTRUCTION

On all roads, gravel base must be tested for compaction and meet the minimum compaction rate as set by the NH DOT and reported to the Town prior to paving. All buried utilities and drainage infrastructure must be in place prior to placement of the roadway gravels.

For new roadways, final pavement will not be allowed until the binder course has been in place for one winter season.

No permanent paving will be allowed on existing Town roads or new roadways after November 1 and prior to April 15. If trenching is necessary and approved by the DPW Director, temporary hot bituminous pavement is required.

Construction shall not be permitted on weekends or holidays within 1,000 ft of residential dwellings without approval from the DPW Director. Construction hours shall be limited to 7:00 am to 5:00 pm within 1,000 ft of residential dwellings unless otherwise determined by the Planning Board at the time of approval, or by DPW Director. No equipment may be started or operated outside the designated construction hours. Blasting shall take place in accordance with the Fire Department's Blasting Regulations (See Appendix V).

1.016 PRECONSTRUCTION MEETING

The Public Works and Community Development Departments reserve the right to require a preconstruction meeting for all proposed construction projects that will include construction activity in a proposed or existing Town ROW, or will affect the Town's ROW or municipal facilities.

Representatives from each of the following departments and stakeholder groups attend the preconstruction meeting, as applicable:

- Public Works
- Water Utilities
- Construction Monitoring Consultant
- Code Enforcement Department
- Planning Department
- Police Department
- Fire Department
- Ambulance Department
- Owner/Applicant/Developer
- Design Engineer
- Contractor(s)
- Public Utilities (Cable, Power, Tel. Co., Gas)

The following agenda items shall be discussed:

A. Introductions
B. Approved plans – overview by design engineer
C. Design changes
D. Construction schedule/approach
E. Erosion control
F. Fire Department concerns
G. Code Enforcement Department concerns
H. DPW concerns
I. Water Utilities concerns
J. Planning Department concerns
K. Police Department concerns
L. Ambulance Department concerns
M. Permits such as but not limited to:
    a. Blasting
    b. NOI for Stormwater Discharge Relating to Construction Activity
    c. Road Opening Permit
    d. Building Permit
    e. Stormwater Permit
N. Shop drawings and certification
O. Construction monitoring
P. Completion bond
Q. Construction monitoring inspection fee account and charges
R. Erosion control inspection fee account

1.017 QUALITY OF WORK

All work shall comply with Town ordinances and regulations, and material installed to manufacturer specifications and accepted engineering practices.

1.018 ROADWAY INSPECTIONS

A daily roadway inspection sheet shall be required by the DPWfor each project or phase of a project. One copy shall be maintained by the contractor, developer and/or owner and one copy by the DPW or designated representative. As work is completed, the contractor, developer and/or owner must request sign-off of listed inspection milestone items by the DPW or designated representative.

1.019 STORMWATER MANAGEMENT AND EROSION CONTROL REGULATIONS

The most current version of the Stormwater Management and Erosion Control Regulations is available at the Community Development office or online at the Planning Department's website www.milford.nh.gov.

1.020 NOTICE OF INTENT

In accordance with the federal Notice of Intent (NOI) for Stormwater Discharges Relating to Construction Activity regulation, the required documentation must be submitted to the Environmental Protection Agency (EPA) and NH DES for all construction projects that will affect more than one acre of land. Confirmation of acceptance of an NOI for the project must be provided to the Town at the preconstruction meeting.

1.021 CERTIFICATE OF OCCUPANCY

When the contractor, developer and/or owner for a project wishes to obtain Certificates of Occupancy for residences/buildings on any of the project roadways, notification shall be made to the Department of Community Development, Code Enforcement Office. The following must be complete on the roadway prior to issuance of the certificate:

A. All buried utilities in place, tested and operational, with sign-off by private utilities.
B. Required fire protection systems are in place and operationally approved by the Fire Department.
C. Roadway engineering inspection(s) daily log is up-to-date.
D. The binder pavement is in place for the entire roadway or phased roadway(s) servicing occupancy.
E. The binder pavement is in place for any sidewalk(s) servicing occupancy.
F. Required off-site improvements are complete or sufficient bond in place.
G. The drainage system is clean and functioning as intended.
H. The site and/or roadway right-of-way (ROW), including slopes, is stabilized and proper erosion control measures are in place.
I. Protective measures, such as guardrails, are in place.
J. The roadway surface is clean and clear of all debris, construction materials, equipment, etc.
K. Street signs, including the New Road Constructions sign for future public roadways and Stop signs are in place.
L. Finish wear course of pavement and markings in place.
M. ROW property bounds are in place (this may be deferred until time of road acceptance), and all property pins outside of ROW.
N. The roadway surface up to occupied structure is clean and clear of all debris and obstruction such as construction materials, equipment, storage boxes, etc.
O. All necessary bonding in place.

1.022 RECOMMENDATION OF ACCEPTANCE AND CERTIFICATE OF FINAL COMPLETION

When the construction of new Town roadways and off-site improvements of Town facilities is considered complete, it is required that the contractor, developer and/or owner to apply for acceptance of the roadway and off-site improvements by the Town. The request shall be made through the Community Development Department. Once the request has been made DPW will schedule a final inspection. If all related work and improvements are acceptable to the DPW Director or designated representative, a recommendation for acceptance of the work will be included in the roadway and off-site improvements acceptance application. This applications is signed off by and transmitted from the Community Development Department to the Board of Selectmen for final approval.

1.023 WAIVERS AND APPEALS

1.021.1 WAIVERS

When the contractor, developer and/or owner for a project seeks a waiver of any portion of these regulations a waiver request should be made in writing and submitted as follows:

A. During the Planning Board approval process all requested waivers must be submitted to the Planning Board on a *Waiver Request Form* available through the Planning Department website at www.milford.nh.gov or through the Community Development office.
B. After final plans have been approved, all waivers shall be requested in writing and submitted to both the DPW Director and the Director of Community Development for approval.
    a. The waiver request shall state the numbered section of this document to be waived and the reasons why the waiver is needed.
    b. The waiver request shall be date stamped once received.
    c. The directors of Public Works and Community Development have 10 business days to jointly render a decision on the waiver request.
    d. At the end of the 10 business day period the applicant may apply to the Board of Selectmen for relief if no decision has been made. The Board of Selectmen will render a decision within 10 business of receipt of the non-acted on waiver request.
    e. The 10 business day timeline may be extended, with permission from the applicant if outstanding weather, design or other circumstances require more time for the decision to be rendered.

1.021.2 APPEALS

When the contractor, developer and/or owner for a project wishes to appeal a decision made by the Community Development Director, or the DPW Director or designated representative, an appeal request shall be submitted in writing, stating the specific decision to be appealed and reasons why to the Directors of Community Development or Public Works, as appropriate.

The Director the appeal was filled with will have 10 business days to render a decision on the appeal. At the end of the 10 business day period if no decision has been made, the applicant may apply to the Board of Selectmen for a decision. The Board of Selectmen will render a decision within 10 business days of receipt of the appeal request. The 10 business day timeline

may be extended, with permission from the applicant if outstanding weather, design or other circumstances require more time for the decision to be rendered.

ARTICLE II: ROADWAY AND TRENCHING CONSTRUCTION

2.01 GENERAL CONSTRUCTION

2.01.1 DESCRIPTION OF WORK

Work in this section comprises general construction, including but not limited to, excavation, backfilling, grading, seeding, paving, construction of storm drain systems and guard rails.

2.01.2 REFERENCES AND STANDARDS

A. No work shall begin prior to approval of proposed plans by the DPW Director or Town of Milford Planning Board, as appropriate, and a preconstruction meeting is held, as necessary.

B. The contractor, developer and/or owner is responsible for obtaining any approvals or permits from other federal, State or local authorities, as applicable.

C. *The State of New Hampshire Department of Transportation Standard Specifications for Road and Bridge Construction*, as amended latest edition, shall be used as the standard for any work not addressed in these specifications.

D. All work shall conform to OSHA approved practices.

E. The contractor, developer and/or owner is responsible for contacting Dig-Safe (1-888-DIG-SAFE or 1-888-344-7233).

2.01.3 WORK SEQUENCE

The Contractor, developer and/or owner shall:

A. Coordinate construction schedule and performance with the DPW or designated representative during construction.

B. Not close off usage of or access to existing facilities and roadways.

C. Limit work to between the hours of 7:00 am and 5:00 pm. No work shall be permitted on weekends or holidays, unless days and times are specified otherwise on approved plans or by the DPW Director. Start of construction shall be defined as starting of any equipment at the construction site.

D. Be allowed blasting in accordance with the Town of Milford Blasting Regulations and Permit (see Appendix V).

2.01.4 USE OF PREMISES

A. Contractor, developer and/or owner shall limit use of premises work, storage, and for access, to allow:
    1. Normal public use of public property, rights-of-way, etc.

    2. Access to private property.

B. Coordinate use of premises under direction of the DPW Director or designated representative.

C. Assume full responsibility for protection and safekeeping of products under this project.

2.01.5 EXECUTION

Throughout the construction of any roadway project in the Town of Milford, the DPW has the authority to alter any aspect of the road construction which it deems necessary for the proper completion of that roadway. Major deviations from a Planning Board approved plan may require Planning Board approval per the Community Development Director.

2.02 TRAFFIC CONTROL

2.02.1 REQUIREMENTS

The contractor, developer and/or owner shall:
Provide, erect, and maintain all necessary barricades, lighting, signals, signs, traffic control devices, and employ flagging personnel and uniformed officers as required for the protection of the work and safety of the public. All work shall be done in strict accordance with the requirements of the governing authority and be in place prior to the commencement of construction.

The contractor's methods for routing of traffic during construction shall be presented to the Police Chief, coordinated with Fire, Ambulance and MACC Base, and once approved, submitted to the DPW Director. If necessary, the approved methods for routing of traffic shall be submitted to the NH DOT. Plans shall be reviewed at the preconstruction meeting.

2.02.2 PRODUCTS

All barricades, warning signs, lights, temporary signals, and other protective devices must be in conformance with NHDOT and Town Standards, and with the *Manual of Uniform Traffic Control Devices for Streets and Highways* published by the U.S. Government Printing Office.

2.02.3 PERMITS

All work in, upon, under, or across roadways, ROWs and public easements shall be accordance with the Road Opening Permit, Driveway Permit and approved plans. The contractor shall work with the owner to obtain the required permits from the Departments of Public Works and Community Development, and if necessary NH DOT.

2.02.4 REMOVAL

Upon completion of the work, the contractor shall remove and properly dispose of all remaining temporary and construction materials required under this Section.

All areas and utilities shall be restored to original or specified conditions at the completion of the work.

2.03 CLEARING AND GRUBBING

2.03.1 GENERAL

The contractor, developer and/or owner shall:

A. Delineate boundaries of project areas to be cleared onsite with tree markings, construction fencing, snow fencing or silt fencing as appropriate to avoid unnecessary cutting or removal. Care should be taken to protect root systems from damage due to excavation or compaction. Individual trees, rock formations and other landscape features to be retained should also be clearly marked and bounded onsite.

B. Clear project area of plant life and grass.

C. Remove root systems of trees and shrubs in project area to be cleared.

D. Prune trees to remain where branches or roots will interfere with construction operations.

E. Remove debris.

2.03.2 REGULATORY REQUIREMENTS

Contractor, developer and/or owner shall comply with all applicable local, State and federal regulations for disposal of debris. Storage and disposal of debris onsite shall conform to approved plans. Burning of debris onsite is prohibited per state statue.

2.03.3 PROTECTION

Contractor, developer and/or owner shall:

A. Protect plant growth and features to remain from damage, excavation or compaction.

B. Protect benchmarks and existing work from damage or displacement.

C. Maintain approved site access for vehicle and pedestrian traffic.

D. Maintain designated stock pile areas with appropriate stormwater and erosion controls.

E. Protect existing trees and other vegetation to remain in place against unnecessary cutting, breaking, skinning of roots, skinning and bruising of bark, compaction, smothering of trees by stockpiling construction materials or excavated materials within drip line and excess foot or vehicular traffic, or parking of vehicles within drip line.

2.03.4 CLEARING AND GRUBBING

Contractor, developer and/or owner shall:

A. Clear project areas required for access to site and execution of work.

B. Remove trees and shrubs within marked project areas and where shown on approved plans. Grub out stumps and roots.

C. Clear undergrowth and deadwood, without excavating topsoil and subsoil.

D. Remove and dispose of all materials used for mulch and/or ground cover. Do not stockpile or reuse the material.

E. Use only non-mechanical methods for grubbing inside drip lines of trees that are to remain in place.

2.03.5 PRUNING TREES

Contractor, developer and/or owner shall:

A. Carefully and cleanly cut roots and branches of trees indicated to remain, where such roots and branches obstruct the construction.

B. Prune trees in accordance with standard horticultural practice. Do not cut tree leaders.

C. Repair and paint tree wounds in accordance with standard horticultural practice.

2.03.6 REMOVAL

Contractor, developer and/or owner shall:

A. Remove debris from site.

B. Dispose of debris in accordance with local, State and federal regulations.

2.04 DEWATERING

2.04.1 SYSTEM PERFORMANCE REQUIREMENTS

Contractor, developer and/or owner shall insure that:

A. Dewatering shall include all necessary control and disposal of groundwater on a continual basis during construction.

B. Dewatering shall include the lowering of the groundwater table to relieve any hydrostatic head that could cause a decrease in the stability of the excavated subgrade. It shall also include the intercepting of seepage which could otherwise emerge from the slope or sides of excavations which could cause a decrease in the stability of the excavated subgrade or the slopes or sides of the excavations.

C. Dewatering shall utilize a sediment trap, dirt bag or other currently approved BMP application to avoid sediment being pumped into wetlands. Dewatering is not allowed to outlet directly into a wetland.

D. Dewatering shall be performed during construction to temporarily protect against the following:

1. The loss of any material beneath the excavated subgrade or from the slopes or sides of the excavations or the movement of any fine particle materials from the soil.

2. Any increased vertical or lateral loads on the excavation support systems.

3. Any disturbance, rupture, instability, boiling or heaving of the bottom of excavated subgrade during:
   a. Excavation.

   b. Placement of foundation or bedding materials.

   c. Construction of slabs, footings, pipes, conduits, under-drains and any other structures.

   d. Backfilling operations.

2.04.2 ADDITIONAL PROVISIONS

Contractor, developer and/or owner shall:

A. Provide, operate and maintain any dewatering system required to lower and control groundwater levels and groundwater hydrostatic pressure during construction as required by these specifications. The contractor, developer and/or owner shall assume full responsibility and expense for the dewatering system.

B. Remove and dispose of water resulting from activities described in section 2.04. Provide siltation settling basins for all discharges from dewatering systems. Submit plan of settling basins and discharge facilities for review by the Town prior to dewatering system installation.

C. Remove dewatering systems and equipment when no longer required.

2.04.3 EXECUTION

The dewatering system shall be capable of developing an excavated subgrade relieved of any hydrostatic pressure that could cause a decrease in the stability of the excavated subgrade. The dewatering system shall provide the necessary groundwater control for the proper performance required for completion of the work.

The dewatering system shall not cause damage to newly constructed or existing properties, buildings, utilities and other work due to the loss of support from incompletely drained soils or from removal of soil particles resulting from the dewatering system operation.

Dewatering facilities shall be located where they will not cause interference with work performed by others.

If the dewatering system utilized by the contractor, developer and/or owner causes or threatens to cause damage to new or existing facilities, the dewatering system shall be modified. The contractor, developer and/or owner shall be responsible for any necessary modifications and shall repair all damage caused by the dewatering system operation.

All subsurface water collected must be disposed in a manner which conforms to all applicable local and state ordinances, statutes and laws.

Dewatering systems shall maintain the groundwater table at a level necessary for the type of construction performed based on appropriate engineering; as well as be continually maintained

to provide a firm, stable, excavated subgrade at all times as required for propose performance of work.

2.04.4 JOB CONDITIONS

Contractor, developer and/or owner shall:

A. Erosion Control: Provide adequate protection, in conformance with the Stormwater Management and Erosion Control Regulations from erosion from any of the dewatering operations utilized during the course of the construction. Any damage, disruption or interference to newly constructed work or existing properties, buildings, structures, utilities and/or other work resulting directly or indirectly from dewatering operations conducted by the contractor, developer and/or owner shall be remedied by the same.

B. Treatment of Dewatering Operations Discharges: Provide such additional treatment devices as may be required. This may include the construction of sumps and/or settling basins, stone rip-rap, silt fences or other requirements. The treatment devices shall be later removed and/or filled in with acceptable backfill material, stabilized and restored to original conditions once they are no longer needed.

2.05 EXCAVATION SUPPORT

2.05.1 WORK INCLUDED

Contractor, developer and/or owner shall be responsible for designing, furnishing, installing, maintaining and removing excavation support systems for the following:

A. Excavation.

B. Trench excavation.

2.05.2 REFERENCE STANDARDS

The following standards shall be adhered to:

A. ASTM A328 - Steel Sheet Piling.

B. NFPA - National Forest Products Association.

2.05.3 SYSTEM DESCRIPTION

The construction of the excavation support systems shall be submitted on a Professional Engineer (PE) stamped plan and may include, but not be limited to soldier piles, lagging, trench boxes, wood sheeting and steel sheeting, including bracing members such as walers, struts, shores and tieback anchors and all other system members.

2.05.4 MATERIALS

At a minimum, materials may include but not be limited to:

A. Wood: Tongue and groove; #3 common Douglas Fir or Hemlock; or Utility Grade Southern Pine; NFPA grading.

B. Steel: ASTM A328.

C. Trench Boxes: Fabricated steel.

2.05.5 EXECUTION

The contractor, developer and/or owner shall be totally responsible for the means and methods of the excavation, and support system. The design and construction of the excavation support systems shall be stamped by a PE.

The support system shall be designed to support the maximum loads that will occur during construction.

Excavation support systems shall be constructed so as to be able to support all vertical and lateral loads and other surcharge loads imposed on the system during construction including earth pressures, utility loads and other surcharges and construction loads in order to provide safe construction of the permanent structures and prevent movement and/or damage to adjacent soil, buildings, structures and utilities.

The contractor, developer and/or owner shall not brace to concrete unless authorized by the DPW or designated representative and then only if concrete has reached its design strength as determined by compressive test of representative concrete cylinders which have been cured on site for a period of at least 14 days.

The contractor, developer and/or owner shall not embed any part or portion of excavation support system in the work. Do not construct sleeves or openings in the structures to permit bracing through the structures unless authorized by the DPW or designated representative.

The contractor, developer and/or owner shall not perform excavations in unstable earth. Stabilization of all earth materials behind support walls must be done before excavation is allowed to proceed.

The contractor, developer and/or owner shall monitor all excavations and provide a means of determining movement of adjacent soil, buildings, structures and utilities.

Where movement or damage is observed, the contractor, developer and/or owner shall immediately cease excavation operations and correct deficiency in the excavation support system that allowed for movement or damage, and repair all damage.

The contractor, developer and/or owner shall be responsible for and shall repair any damage resulting from excavations.

During construction, the contractor, developer and/or owner shall be responsible for meeting all requirements and standards of OSHA (Occupational Safety and Health Administration).

2.05.6 SHEETING LEFT-IN-PLACE

Cut off all sheeting left-in-place at least three feet below the ground surface, whether such sheeting is ordered left in place by the DPW or designated representative, or is left in place for the convenience of the contractor, developer and/or owner. Sheeting left-in-place shall be detailed on As-built plans.

2.06 SITE PREPARATION

2.06.1 WORK INCLUDED

The contractor, developer and/or owner shall:

A. Remove topsoil and stockpile suitable material for later reuse in accordance with the approved plan and the Stormwater Management and Erosion Control Ordinance. Remove excess or unsuitable topsoil from site.

B. Excavate subsoil and stockpile suitable material for later reuse in accordance with the approved plan and the Stormwater Management and Erosion Control Ordinance. Remove excess or unsuitable topsoil from site.

C. Grade and rough contour site.

2.06.2 PREPARATION

The contractor, developer and/or owner shall:

A. Identify required lines, levels, contours, and datum.

B. Identify known below grade utilities and stake and flag locations.

C. Identify and flag above grade utilities.

D. Upon discovery of utility or concealed conditions which affect the progress of the work of this section, notify the approving engineer, DPW Director and utility.

E. Protect trees, shrubs, lawns, and other features remaining as portion of final landscaping, as specified in Section 2.03 Clearing and Grubbing.

F. Protect bench marks, property boundary markers, existing structures, fences, roads, sidewalks and paving and curbs.

G. Ensure erosion control and water quality protection measures are in place and functioning.

H. Protect above or below grade utilities which are to remain.

2.06.3 TOPSOIL EXCAVATION

The contractor, developer and/or owner shall:

A. Excavate topsoil from areas to be further excavated, re-landscaped, or re-graded and stockpile on site in accordance with the approved plan and the Stormwater Management and Erosion Control Ordinance. All excess topsoil not being reused onsite shall be removed.

B. All stockpiled loam remaining idle for more than 30 days shall be stabilized to reduce erosion.

2.06.4 SUBSOIL EXCAVATION

The contractor, developer and/or owner shall:

A. Excavate subsoil from areas to be re-landscaped or re-graded and stockpile on site and remove excess subsoil not being reused from site.

B. When excavation through roots is necessary, perform work by hand and cut roots in accordance with Section 2.03 Clearing and Grubbing.

2.06.5 TOLERANCES

Allowed: Top Surface of Subgrade - Plus or minus one (1”) inch.

2.07 LEDGE AND BOULDER EXCAVATION

2.07.1 WORK INCLUDED

The contractor, developer and/or owner shall include the following when excavating ledge and boulders:

A. Conducting preconstruction survey.

B. Excavating and disposing of ledge.

C. Excavating and disposing of boulders.

D. Backfilling of ledge and boulder excavation.

E. Compliance with OSHA standards.

2.07.2 DEFINITIONS

Ledge shall mean:

A. solid igneous, sedimentary, metamorphic, conglomerate boulder which requires for its removal drilling and blasting, wedging, sledging or barring; or,

B. single pieces of solid rubble masonry and Portland cement concrete two (2) cubic yard in volume or larger.

Rock excavation shall consist of all solid rock that cannot be removed without blasting or ripping. It shall also consist of boulders and parts of masonry structures, except unreinforced concrete slabs less than 6 inches in depth, when found to measure two cubic yard (1.5 m^3) or more.

2.07.3 LEDGE AND BOULDER BLASTING SUBMITTAL REQUIREMENTS

Refer to Appendix V for all blasting related permits and information and/or the Milford Fire Department.

2.07.4 LIMITS OF LEDGE AND BOULDER EXCAVATION

Ledge excavation shall be performed, unless otherwise directed, so that no projection shall come within vertical planes twelve (12”) inches outside of the structure being built, or as shown on the plans. In trenches, the rock shall be removed to the limits shown on the typical trench section. Where excavation is carried beyond the above defined limits, the additional space shall be refilled with concrete for structures bearing, otherwise on rock, or backfill material, as specified in Section 2.08 EXCAVATION, BACKFILLING AND COMPACTING.

If ledge below limits of excavation is shattered by blasting caused by holes drilled too deep, or too heavy charges of explosives, or any other circumstance due to blasting, and if such shattered ledge does not provide suitable foundation, the ledge shall be removed and the

excavation refilled with backfill material, as specified in Section 2.08 EXCAVATION, BACKFILLING AND COMPACTING, at the expense of the contractor, developer and/or owner.

2.07.5 NOTIFICATION

When ledge or boulders are encountered, the material shall be uncovered and the DPW or designated representative be notified.

2.07.6 BLASTING

The contractor, developer and/or owner shall obtain and adhere to the latest edition of the Fire Department Explosives and Blasting Regulations (See Appendix V).

2.07.7 DISPOSAL AND REMOVAL OF LEDGE AND BOULDERS

Ledge and boulders considered unsuitable material for trench backfill shall be removed and properly disposed of off-site.

2.07.8 BACKFILLING LEDGE AND BOULDER EXCAVATIONS

Ledge and boulders shall be replaced with backfill material as specified in Section 2.08 EXCAVATION, BACKFILLING AND COMPACTING.

2.08 EXCAVATING, BACKFILLING AND COMPACTING

2.08.1 WORK INCLUDED

Excavation, Backfilling and Compacting shall include, but not necessarily be limited to:

A. Ensuring erosion control and water quality protection measures are in place.

B. Excavating topsoil and stockpiling topsoil for later use.

C. Saw cutting pavement and excavating pavement for removal and proper disposal.

D. Excavating subsoil and stockpiling subsoil for later use.

E. Excavating unsuitable material for removal and proper disposal.

F. Replacing ledge and boulder excavation and excavated unsuitable material with select fill material or common fill material.

G. Placing select fill materials below utilities, tankage and concrete structures.

H. Backfilling excavations with common fill materials.

I. Placing common fill materials for bringing site to subgrade.

J. Complying with compaction requirements.

K. Removing and disposing of excess topsoil and subsoil, excavated unsuitable material, and excavated pavement, rock, boulders, solid rubble masonry and Portland cement concrete off-site.

L. Grading and rough contouring the site to the cut limits required for construction.

M. Removing unsuitable material from excavated material and making the excavated material suitable for reuse.

2.08.2 REFERENCE STANDARDS

The following standards shall be adhered to:

A. ASTM C33 - Concrete Aggregates.

B. ASTM C136 - Sieve Analysis of Fine and Coarse Aggregates.

C. ASTM D75 - Sampling Aggregates.

D. ASTM D1557 - Tests for Moisture - Density Relations of Soils and Soil- Aggregate Mixtures, Using 10-lb Rammer and 18-inch Drop: (Modified Proctor).

E. ASTM D2922 - Tests for Density of Soil and Soil-Aggregate in Place by Nuclear Methods (Shallow Depth).

F. State of New Hampshire Department of Transportation (NHDOT) Standard Specifications for Road and Bridge Construction (latest edition).

2.08.3 SAMPLES

Samples shall be obtained in accordance with ASTM D75 and submitted to, in 75-lb samples of each type of materials, for testing to the DPW or designated representative.

2.08.4 TESTING

Tests and analysis of fill materials will be performed in accordance with the methods in ASTM C136. The contractor, developer and/or owner shall be responsible for payment of costs resulting from retesting of any soils.

2.08.5 PROJECT RECORD DOCUMENTS

The contractor, developer and/or owner shall accurately record location of utilities remaining, rerouted utilities, and new utilities by horizontal dimensions, elevations or inverts, and slope gradient. Records of utility locations shall be provided to the DPW prior to acceptance of a roadway, and the Code Enforcement Department prior to issuance of a Certificate of Occupancy, if necessary.

2.08.6 MATERIALS - GENERAL

The following standards shall be adhered to:

A. Topsoil: Friable, fertile, natural, free-draining loam typical of the locality; free of subsoil, roots, grass, sticks, weeds, clay, sod lumps, debris and stones larger than one (1”) inch in maximum dimension. Soil shall not be excessively acid or alkaline, nor contain toxic material harmful to plant growth.

B. Unsuitable Material: Cut or broken pavement, debris, concrete or other rubble, organic materials; muck, peat, silty soils or clayey soil; rock over six (6”) inches in maximum dimension; or any material which in the opinion of the DPW or designated representative, will not provide sufficient support or maintain the completed construction in a stable condition.

C. Common Fill Materials

1. Subsoil (suitable for reuse): Material excavated on site which is friable, natural soil composed of gravel, sand, or silty or clayey gravel and sand; free from debris, concrete or other rubble, organic matter, muck, peat, excavated rock and boulders over six (6”) inches in maximum dimension.

2. Additional Fill: Imported material which is friable, natural soil composed of gravel, sand, or silty or clayey gravel and sand; free from debris, concrete or other rubble, organic matter, muck, peat, excavated rock and boulders over six (6”) inches in maximum dimension.

D. Select Fill Materials

1. Bank Run Gravel: Material excavated from a suitable gravel bank and consisting of stones, rock fragments and fine durable particles resulting from natural disintegration of rock; meeting the following limits, as noted in NHDOT Standard Specification Section 304, as modified herein, when tested in accordance with ASTM C136:

Sieve Designation	Percentage by Weight Passing Square Mesh Sieve TOTAL SAMPLE
(Maximum size - 4 inches)	
3-1/2-inch	95 - 100
No. 4	25 - 70
No. 200 (based on fraction passing the No. 4 sieve)	0 - 12

2. Sand: Clean mineral aggregate with the following particle size limits when tested in accordance with ASTM C136:

Sieve Designation	Percentage by Weight Passing Square Mesh Sieve TOTAL SAMPLE
No. 4	100
No. 100	0 - 30
No. 200	0 - 12

3. Crushed Gravel (structural fill): Clean, hard crushed gravel; free from silt, topsoil, clay, and organic matter; uniformly graded from coarse to fine within the following limits, as noted in NHDOT Standard Specification Section 304, when tested in accordance with ASTM C136:

Sieve Designation	Percentage by Weight Passing Square Mesh Sieve TOTAL SAMPLE

3-inch	100
2-inch	95 - 100
1-inch	55 - 85
No. 4	27 - 52
No. 200	0 - 12

4. Crushed Stone: Clean mineral aggregate meeting the following limits when tested in accordance with ASTM C136:

Sieve Designation	Percentage by Weight Passing Square Mesh Sieve TOTAL SAMPLE
3/4-inch	100
No. 4	0 - 5

5. Stone for Stone Fill: Hard, blasted angular rock other than serpentine rock containing the fibrous variety chrysotile (asbestos); reasonably well graded from smallest to maximum size stone so as to form a compact mass when in place: note NHDOT Standard Specification Section 585.

   a) Class A - Approximately 50 percent of the mass having a minimum volume of 12 cubic feet, approximately 30 percent of the mass ranging from 12 and 3 cubic feet, approximately 10 percent of the mass ranging from 3 and 1 cubic feet, and the remainder of the mass composed of spalls.

   b) Class B - Approximately 50 percent of the mass having a minimum volume of 3 cubic feet, approximately 40 percent of the mass ranging from 1 and 3 cubic feet, and the remainder of the mass composed of spalls.

   c) Class C - Shall conform to the following gradation:

Sieve Designation	Percentage by Weight Passing Square Mesh Sieve TOTAL SAMPLE
12-inch	100
4-inch	50 - 90
1-1/2-inch	0 - 30
3/4-inch	0 - 10

   d) Class D - Shall conform to the following gradation:

Sieve Designation	Percentage by Weight Passing Square Mesh Sieve TOTAL SAMPLE
2-inch	100
1-1/2-inch	95 - 100
3/4-inch	35 - 70
3/8-inch	10 - 30

No. 4 0 - 5

2.08.7 FILTER FABRIC

Filter fabric shall be applicable per appropriate engineering design. Substitution of a product equal or better quality, detail, function and performance may be proposed for substitution, and approved by DPW Director or designated representative, prior to use.

2.08.8 PREPARATION OF SITE

It is the responsibility of the contractor, developer and/or owner to verify the following:

A. Notification of DIG-SAFE (1-800-225-4977) prior to excavating, backfilling or compaction.

B. Notification of utility companies to locate and temporarily support, remove, and/or relocate utilities.

C. Identification of known underground utilities. Underground utilities must be staked and flagged.

D. Identification and flagging of subsurface, surface and aerial utilities. All subsurface, surface and aerial utilities must be staked and flagged.

E. Identification of required lines, levels, contours, and datum.

2.08.9 PROTECTION

The contractor, developer and/or owner shall:

A. Adhere to all OSHA requirements.

B. Protect all above and below grade utilities which are to remain.

C. Protect bench marks, existing structures, fences, stone walls, sidewalks, paving, and curbs from equipment and vehicular traffic.

D. Protect trees, shrubs, lawns, and other features remaining as a portion of final landscaping in accordance with Section 2.03 Clearing and Grubbing.

E. Protect excavations by shoring, bracing, sheet piling, underpinning, or other methods required to prevent cave-in or loose soil from falling into excavation in accordance with Sections 2.05, 2.07, & 2.08 .

F. Underpin adjacent structures which may be damaged by excavation work, including service utilities and pipe chases.

G. Protect bottom of excavations and soil adjacent to and beneath foundations from frost.

2.08.10 TOPSOIL EXCAVATION

The contractor, developer and/or owner shall excavate topsoil from areas to be further excavated, landscaped, or graded, and stockpile in accordance with the approved plan and the

Stormwater Management and Erosion Control Regulations. Remove excess topsoil not being reused from site. Topsoil suitable for reuse shall be in conformance with paragraph 2.08.6. Stockpiled topsoil shall be protected from erosion.

2.08.11 PAVEMENT EXCAVATION

When pavement must be excavated:

A. All pavement shall be cut with machines and/or other acceptable methods prior to removal.

B. All pavement shall be excavated within the limits shown on the approved plans.

C. Keep excavated pavement separate from topsoil and subsoil stockpiles.

D. Remove and properly dispose of pavement excavated from site.

2.08.12 SUBSOIL EXCAVATION

The contractor, developer and/or owner shall:

A. Slope sides of excavation shall satisfy OSHA requirements.

B. Excavate subsoil from areas to be landscaped or graded to the limits shown on the approved plans.

C. Excavate subsoil required for structures, utilities or yard piping and other work to the limits necessary or as shown on the approved plans.

D. Stockpile excavated material to be reused and removed, and properly dispose of unsuitable subsoil and excess subsoil not being reused, off-site. Subsoil suitable for reuse shall be in conformance with paragraph 2.08.6C. Stockpiled subsoil shall be protected from erosion.

E. Remove all muck, peat and other unsuitable material within trench limits or where structures are to be located. Excavated unsuitable material shall be replaced with backfill material as specified.

F. Notify the engineer and DPW or designated representative of unexpected subsurface conditions, discovery of unknown utilities or concealed conditions, and discontinue affected work in area until notified by DPW to resume work.

G. Ensure excavations do not interfere with normal 45 degree bearing influence of any foundation, structures and utilities.

H. Grade the top perimeter of excavations to prevent surface water run-off into excavation.

I. Cleanly cut roots in accordance with Section 2.03 when excavation through roots is necessary.

J. Maintain bottom of all excavations stable, dry and free of water on a continual basis.

K. Remove rocks greater than six (6”) inches in maximum dimension, boulders, and ledge from sub-soil.

2.08.13 BACKFILLING PREPARATION

The contractor, developer and/or owner shall:

A. Brace walls and slabs of structures to support surcharge forces and construction loads to be imposed by backfilling operations.

B. Remove all water, snow, ice and debris from excavations and trenches before placing pipe bedding, foundation material, under tankage or concrete structures or backfilling.

C. Compact subgrade surfaces disturbed by construction operations to density required for backfill material. Do not place bedding, foundation material or backfill on porous, unstable or unsuitable subgrade.

2.08.14 BEDDING AND BACKFILLING

The contractor, developer and/or owner shall:

A. Ensure bedding and backfilling materials do not contain frozen materials, ice or snow.

B. Utilize crushed stone or other applicable BMP beneath pipe where rock, boulders, or unsuitable bearing materials have been removed.

C. Install pipe on shaped, undisturbed subgrade or on bedding material in accordance with Section 2.08.19 SCHEDULE OF BEDDING, BACKFILL AND COMPACTION.

D. Support pipe during placement and compaction of bedding material.

E. Place filter fabric to completely enclose crushed stone used for bedding material or for replacement material where rock, boulders or unsuitable material have been removed in pipe trenches unless authorized otherwise by the DPW or designated representative. Under structures, where crushed stone is used, the filter fabric shall enclose the material on the sides and bottom, and on top, extend 2 feet under all edges of the proposed structure.

F. Place and compact bedding for utilities and yard piping in accordance with the specifications and typical trench details shown on the approved plans.

G. Backfill excavations and trenches to depths, contours and elevations required.

H. Each layer of backfill shall be compacted to the specified density the same day it is placed.

I. Maintain optimum moisture content of backfill materials to attain required compaction density.

J. Fill that is too wet for proper compaction shall be disced, harrowed or otherwise dried to a proper moisture content for compacting to the required density. If the fill material cannot be dried within 48 hours of placement, it shall be removed and replaced with drier

fill. This applies to both subsoil (suitable for reuse) and all imported select and/or common fills.

K. Fill that is too dry for proper compaction shall be watered uniformly over the surface of the loose layer. Sufficient water shall be added to allow compaction to the required density.

L. Employ placement and compaction methods that will not disturb or damage work or existing structures or utilities. Disturbed or damaged work, structures or utilities shall be repaired.

M. Do not backfill against unsupported foundation walls or before required concrete strength has been achieved. Backfill simultaneously on each side of unsupported foundation walls.

N. Grade backfill to provide a smooth surface which will readily shed water and provide positive drainage. Areas to receive compacted fill shall be graded to prevent ponding of surface water runoff.

2.08.15 BACKFILLING TOLERANCES

Top Surface or Subgrade shall be: Plus or minus one inch.

2.08.16 COMPACTION

The maximum compaction density at optimum moisture content for bedding and backfill materials shall be determined in accordance with ASTM D1557 (Modified Proctor).

All bedding and backfill materials shall be compacted to the density shown in Section 2.08.19 SCHEDULE OF BEDDING, BACKFILL AND COMPACTION.

Testing density of soil in place (compaction) shall be performed in accordance with ASTM D1556, ASTM D2167, or ASTM D2922. If tests indicate compacted bedding and/or backfill does not meet specified requirements, the contractor, developer, and/or owner shall remove, replace and retest.

2.08.17 GRADING

The contractor, developer and/or owner shall:

A. Areas to be Loamed, Seeded and Landscaped:
   1. Perform all rough grading required to attain the elevations indicated on the approved plans or as required.

   2. Grade to elevations shown on the approved plans or as required for landscaping. Remove all material, including rock and boulders to a point at least four (4”) inches below the finished grade of landscaped areas to be loamed and seeded.

   3. Remove all ruts and other uneven surfaces by surface grading.

B. Grading Areas to be Paved or Surfaced:

1. Perform all rough grading, including shaping, sloping, and any work necessary to prepare the subgrades of all roadways, walks and parking areas. Subgrade shall be brought to the bottom elevation of the base course under paved or surfaced areas.

2. Accomplish all grading within the slope and grade lines as indicated on the approved plans, unless otherwise authorized in writing by the DPW or designated representative. The roadway shall be graded to full cross section width at subgrade before placing any type of subbase or pavement except that partial width construction may be permissible where necessary for the maintenance of traffic.

C. Slope grade away from structures to be a minimum of two (2”) inches in ten (10’) feet, unless noted otherwise.

D. Make gradual changes in grade. Slopes shall transition gradually into level areas.

E. Grade all areas completely and remove and dispose of all excess excavated, bedding and backfill materials from site.

F. Backfill to original grade or as indicated herein or on the approved plans. Deviations and settlement shall be corrected.

2.08.18 FIELD QUALITY CONTROL

All subgrades must be inspected and accepted by the DPW or designated representative prior to proceeding with final grading. Sufficient time must be allowed for the DPW or designated representative to observe and to have any necessary tests performed on the subgrade.

2.08.19 SCHEDULE OF BEDDING, BACKFILL AND COMPACTION

The following schedule identifies location; bedding and/or backfill materials to be used (identified from upper to lower fill type); loose thicknesses of each fill lift; and, compaction expressed as a percentage of maximum density and optimum moisture determined in accordance with ASTM D1557 (Modified Proctor).

Location	Material/Thickness	Lifts (Loose) Compaction
● Disturbed, Excavated Subgrade	Natural Subgrade/Existing.	Existing/95 percent or equal to average density of undisturbed material.
● Beneath Structures	Crushed Stone/12" min. w/filter fabric.	12" lifts/95 percent.
● Beneath Structures from which Rock, Boulders or Unsuitable Material has been Removed	Crushed Stone/12" min. w/filter fabric. Structural Fill/as req'd. to 12" below structure.	12" lifts/95 percent. 12" lifts/95 percent.

● Slabs-on-Grade	Crushed Gravel/4" min. on natural subgrade or structural fill.	4" min./95 percent.
	Structural Fill/as req'd.	12" lifts/95 percent.
● Around Structures	Common Fill/as req'd.	12" lifts to top of fill/95 percent.
● Around Structures with Foundation Perimeter Drainage	Structural Fill/as req'd.	12" lifts to top of fill/95 percent.
● Underground Tanks	Structural fill to top of fill.	12" lifts/95 percent.
	Structural Fill/to 2' above tank top.12" lifts/95 percent.	12" lifts/95 percent.
<u>Pipe Bedding</u>		
● DI Water Pipe, DI Sewage Force Main, HDPE, Copper Tubing and PVC Water Pipe	Sand/6" min. below pipe to springline of pipe.	Existing 95 percent or equal to average density of undisturbed material.
● DI Gravity Sewer, PVC Gravity Sewer and PVC Sewage Force Main, HDPE, High Density SPE Storm Drain	Crushed stone/6" min. below pipe to springline of pipe.	6" lifts/95 percent
● RCP Storm Drain, HDPE Storm Drain	Crushed Stone/6" min. below pipe to springline of pipe.	Existing 95 percent or equal to average density of undisturbed material.
● All Pipe in Area of Rock Excavation	Crushed Stone/6" min. below pipe to springline of pipe.	6" lifts/95 percent.
● All Pipe in Area of Unsuitable Material Excavation	Crushed Stone/As req'd, 6" min. from excavation limits below pipe to springline of pipe.	6" lifts/95 percent.
<u>Pipe Blanket</u>		
● DI & PVC Water Pipe, DI & PVC Gravity Sewer, DI & PVC, Sewage Force Main, HDPE, Copper Tubing, and SPE	Sand/from springline of pipe to 12" above pipe.	6" lifts/95 percent.

Storm Drain		
● RCP Storm Drain, PVC Storm Drain, HDPE Storm Drain	Crushed Stone/from springline of pipe to 12" above pipe.	6" lifts/95 percent.
Backfill		
● Under Grassed Areas	Common Fill/From subgrade or 12" above pipe to 4" below finished grade.	15" lifts/90 percent.
● Under Landscaped Areas	Common Fill/From subgrade or 12" above pipe to 12" below finished grade.	15" lifts/90 percent.
● Under Paved Areas	Common Fill/From subgrade or 12" above pipe to subbase for roadbed	6" lifts/95 percent.
● Under Paved Areas	No unprocessed blasted Ledge or Rockfill within 5'-0" of finish grade.	2'-0" lifts/mechanical consolidation
Subbase		
● Bituminous Pavement Subbase	Bank Run Gravel 16" min. Crushed Gravel 8" min.	6" lifts/95 percent.

2.09 SLOPE PROTECTION AND EROSION CONTROL

2.09.1 REQUIREMENTS

A. Plan and execute measures to prevent and control soil erosion in accordance with the Stormwater Management and Erosion Control Ordinance and approved plans.

B. All Erosion control materials shall be furnished, installed and maintained in accordance with the approved plans and maintenance schedules.

2.09.2 REFERENCE STANDARDS

Stormwater Management and Erosion and Sediment Control Handbook for Urban and Developing Areas in New Hampshire, Rockingham County Conservation District, NH Department of Environmental Services, Soil Conservation Service (now the Natural Resources Conservation Service), August 1992, as amended.

NH Stormwater Management Manual, Vol. 1-3, NH Department of Environmental Services, December 2008, as amended.
Stormwater Management and Erosion Control Ordinance, Town of Milford, NH, June 2007, as amended.

2.09.3 PROJECT CONDITIONS

The contractor, developer and/or owner shall:

A. Schedule temporary seeding, mulching and other erosion control measures to take place as soon as possible. All temporary measures shall be permanently stabilized within thirty (30) days unless conditions dictate otherwise as directed by DPW or designated representative.

B. When temporary seeding cannot be accomplished to have established or visible growth by October 15, the disturbed areas shall be covered at a rate of three (3) to four (4) tons of mulch per acre on in accordance with *NH Stormwater Manual Volume 2* or other approved BMP.

2.09.4 MATERIAL REQUIREMENTS

A. Straw Bales: Shall be securely tied by wire or string, baled straw shall be at least fourteen (14”) inches by eighteen (18”) inches by thirty (30”) inches long.

B. Mulch Material: Shall be selected for erosion control that will best meet the site conditions from the following:

1. Straw - Shall be dry, free of mold and weed seeds.

2. Wood Chips - Shall be dry, free of soil and other foreign material.

C. Mulch Anchoring: When mulch must be held in place, either Netting or Tackifier shall be used: paper, twine, plastic, or plastic and wood fiber.

1. Netting – Install jute, wood fiber or biodegradable plastic according to manufactures recommendation.

2. Tackifier – Apply polymer or organic tackifier according to manufactures specifications.

D. Silt Fence: A filter fabric certified by manufacture attached to supporting posts and entrenched in soil.

E. Filter Fabric: Pervious sheet of propylene, nylon, polyester or ethylene yarn with ultraviolet ray inhibitors.

F. Mats or Blankets: Shall consist of machine-made mats made of organic, biodegradable mulch (straw, curled wood fiber or coconut fiber) evenly distributed on or between netting. Mats and blankets shall be installed according to manufactures specifications and the type shall be chosen to be most appropriate product per site conditions and project objectives.

G. Fertilizer: Complete fertilizer 10-20-20 (standard product).

H. Lime: Ground limestone containing not less than ninety-five percent (95%) total carbonates (calcium or magnesium).

I. Temporary Seed Mixture: When it is impractical to establish permanent protective vegetation on disturbed earth by October 15, use " Conservation Mix" or the following seed mixture:

Kind of Seed	lbs per Acre
Switchgrass (Blackwell or Shelter)	4.0
Big bluestem (Niagara or Kaw)	4.0
Little bluestem (Camper or Blaze)	2.0
Sand lovegrass (NE-27 or Blaze)	1.5
Birdsfoot trefoil (Viking)	2.0

Inoculum specific to Birdsfoot trefoil must be used with the above mixture. If seeding by hand, a sticking agent such as milk or cola shall be used to stick inoculum to the seed. If seeding with hydroseeder, use four (4x) times the recommended amount of inoculum.

2.09.5 GENERAL CONSTRUCTION SEQUENCE TO MINIMIZE EROSION

A. Erect straw bale dikes and/or silt fences as shown on approved plans and as may be required in the field to protect property, waterways, wells and springs.

B. Commence excavation and stockpile soil so that erosion is minimized in accordance with the approved plan. Extra precautions shall be taken when soil is saturated.

C. Control surface water and erosion.

D. Dewater all trenches to two (2') feet below invert of pipe. Filter discharge using straw bales, silt fence, settling basin or natural vegetated buffer as site conditions require and as approved by the DPW or designated representative.

E. Backfill excavation to grade. Grade site so that soil erosion caused by runoff will be minimized.

F. Seed and mulch exposed ground.

2.09.6 SEEDING AND MULCHING

All areas which will remain open shall be seeded and mulched within five (5) days of grading.

Soil samples may be sent to the Natural Resources Conservation Service for analysis to determine the proper seed mixture and fertilizer requirements. Seeding shall be completed between April 15th through June 1st and August 15th through October 14th of each year or as permitted by the Department of Public Works.

The following procedures shall be followed for temporary seeding:

A. Lime Application Rate - apply lime at a rate of seventy-five (75lbs) to one hundred (100 lbs) pounds per one thousand (1000) square feet or as required based upon soil analysis. Incorporate into top two (2) inches of soil.

B. Fertilizer Application Rate - Apply fertilizer at a rate of thirty (30 lbs) pounds per one thousand (1000) square feet or as required based upon soil analysis. Mix thoroughly into the top two (2") inches of soil.

C. Seed Application Rate - Apply seed mixture at a rate of two (2 lbs) pounds per one thousand (1000) square feet evenly in two (2) intersecting directions or per suppliers recommendations. Rake lightly (except when hydroseeding).

D. Mulch: Application Rate - Apply mulch material within twenty-four (24) hours after seeding in accordance with the following:

   1. Straw: Application rate - seventy-five (75 lbs) to one hundred (100 lbs) pounds per one thousand (1000) square feet. Spread by hand or with machine. Anchor on slopes and where subject to blowing or slipping.

   2. Wood Chips: Application rate - two (2") to six (6") inches deep. Use for tree and shrub planting.

E. Anchor mulch on all slopes exceeding five percent (5%) and other areas as required with Mulch Netting. Mulch Netting: Spread over loose mulch and pin to the soil in accordance with the manufacturer's instructions.

2.09.7 STRAW BALE DIKES

Embed straw bales into soil and anchor in place with stakes as required to control soil erosion. Butt straw bales together tightly.

Straw bales shall be replaced when they become clogged with soil particles or as directed by the DPW or designated representative.

2.09.8 DAMAGE AND REPAIR

Repair all damages caused by soil erosion or construction equipment at or before the end of each working day.

2.010 ROADWAY STABILIZATION FABRIC

2.010.1 WORK INCLUDED

The contractor, developer and/or owner is responsible for:

A. Furnishing roadway stabilization fabric.

B. Installation of roadway stabilization fabric.

2.010.2 SUBMITTALS

Submit shop drawings and product data to the DPW or designated representative for approval if information is not contained in previously approved plans.

2.010.3 MANUFACTURER'S WARRANTY

The following minimum warranty is required by the Town:

The manufacturer shall warranty the stabilization fabric against manufacturing defects and material degradation in outdoor exposure for a period of two (2) years from the date of installation. The manufacturer shall replace any material which fails from the above causes within the warranty period. The manufacturer, contractor, developer and/or owner shall furnish the Town of Milford with a written warranty covering the requirements of this paragraph.

2.010.4 DEVELOPER'S GUARANTEE

The manufacturer, contractor, developer and/or owner shall guarantee the stabilization fabric against defects in installation and workmanship for the period of two (2) years commencing with the date of final acceptance. The guarantee shall include the services of qualified service technicians and all materials required for the repairs at no expense to the Town of Milford.

2.010.5 MATERIALS

A. The stabilization fabric shall be manufactured from new, first quality material of the type specified in this document.

   1. The stabilization fabric shall meet all requirements for the specified end use.

   2. The stabilization fabric shall demonstrate the following minimum properties (these properties are based on Mirafi 600x):

Property	Test	Value
Grab Tensile Strength	ASTM D1682	300 lbs
Grab Tensile Elongation	ASTM D1682	35% (max)
Modulus (at 10% elongation)	ASTM D1682	140 lbs
Trapezoid Tear Strength	ASTM D1117	120 lbs
Mullen Burst Strength	ASTM D3786	600 psi
Puncture Resistance	ASTM D3787	130 psi
Abrasion Resistance	ASTM D3884	100 lbs
Coeff. Of Permeability, K	CFMC-GET-2	0.01 cm/sec
Water Flow Rate	CFMC - GET -2	50 gpm/sq ft
Apparent Opening Size (AOS)	COE-CW-02215	#20-#45 Sieve size

2.010.6 STORAGE

Storage of the stabilization fabric shall be the responsibility of the contractor, developer and/or owner. The manufacturer shall make recommendations as the storage procedure for the stabilization fabric. The recommended storage procedures shall note any deviations from the specifications listed in the following Handling and Placement Section 2.010.7.

2.010.7 HANDLING AND PLACEMENT OF STABILIZATION FABRIC

Installation shall be in accordance with the manufacturer's requirements.

The stabilization fabric shall be handled in such a manner as to ensure no damage.

On slopes, stabilization fabric shall be secured by means approved by the manufacturer and the DPW or designated representative, and rolled down the slope so as to preclude folds and wrinkles.

Fabric shall be installed over the full width of the roadway where indicated.

In the presence of wind, stabilization fabric shall be weighted with sandbags or the equivalent to provide wind protection.

The stabilization fabric shall be cut using a cutter approved by the DPW or designated representative. Care shall be taken during cutting to protect other material from damage.

A minimum overlap of two (2') feet shall be required between different pieces of stabilization fabric.

2.011 CURBING

2.011.1 DESCRIPTION

This work shall consist of constructing or resetting curbs as shown on the plans or as ordered.

2.011.2 MATERIALS

A. Curb shall be new granite, or salvaged granite, as indicated in the proposal.

B. Granite shall be hard, durable, reasonably uniform in appearance, and free from weak seams. Solid quartz or feldspar veins will not be cause for rejection.

C. Surfaces of each stone shall be finished in accordance with the requirements of this section. All comparable curbs on the project shall have similar finishes.

D. When the slope curb item description does not indicate a specific height, the size of the stone shall be as shown on the construction detail entitled "granite slope curb". The setting reveal (the vertical height of the exposed face when set) shall be four (4") in (100 mm) or as shown on the plans.

E. Salvaged granite curbing shall be dressed to obtain joints of the same width as specified for new curb.

2.011.3 CONSTRUCTION REQUIREMENTS

Granite Curb: New and Reset.

A. Excavation for curb shall be made to the required depth, and the base upon which the curb is to be set shall be compacted to a firm even surface.

B. Installation of curbing shall be so that the front top arris line conforms to the line and grade required. All spaces under the curbing shall be filled with material conforming to the requirements for roadway base course. This material shall be thoroughly tamped.

C. Joints shall be of the width indicated in this section. They shall be pointed with mortar and the exposed portions finished with a jointer.

D. Curbing to be salvaged and reset shall be carefully removed and stored. The Contractor shall replace any curbing damaged or lost because of his negligence. All exposed portions of reset curbing shall be cleaned by sand blasting.

E. Backfilling shall be accomplished immediately after the curb is set and jointed. Backfill shall be of approved material, placed and thoroughly tamped.

F. Concrete Class B in accordance with 520 may be substituted for aggregate base course and hot bituminous base courses in the curb patch on the roadway side of granite curb. Concrete thickness shall be not less than that of the adjacent pavement.

G. Bridge curb shall be set on a mortar bed of non-shrink, non-metallic grout. The front face shall be plumb and the top shall conform to the required line and grade. All joints shall be grouted and the exposed portions finished with a jointer. Long and short lengths of curb shall be laid alternately unless otherwise ordered.

H. Curb anchors shall be set and grouted as shown on the plans.

Type and Area	Finished Surface	Tolerance
STRAIGHT OR CURVED		
• Top	5 inch wide or as otherwise shown, sawn true plane. Front and back arris lines pitched straight and parallel.	+1/8”, -1/8”
• Front face	Right angle to top, approximately true plane. No drill holes in top 10 inches.	+1”, -½”
• Back face exposed	Plane parallel with front face. Straight split to 1½ inch (40 mm) below exposed surface. No larger than ¼ inch (6 mm) segment of drill holes showing in arris lines.	+1”, -1”
• Concealed	Below 1½ inch (40 mm) from exposed surface.	+1 ½ ”, -1 ½ ”
• Bottom	Approximately parallel to top. Minimum width: 3 inches (75 mm).	See plans
ENDS		
• Exposed portion	Square with planes of top and face.	

JOINTS		
• Exposed	Optimum width: 1 inch	
• Concealed	To break back no more than 4 inches	
SIZE		
• Length of Stones	3 to 10 feet with 50% of sections to be 5 feet or greater, or as indicated	
SLOPE AND END STONE		
• Arris Lines	Straight and true on top, front and lines ends. Drill holes not deeper than ¼ inch.	+¼“, -¼“
FACES		
• Exposed part	Planes; no drill holes in faces longer than 8 inches or deeper than ¼ inch.	+1”, -1”
• Concealed part	Drill holes not objectionable	
• Ends	Square with face except as indicated	
• Joints	One tangent, maximum width: 1 inch (25mm). On curves over 15 feet (4.5m) radius, widen top or bottom from 1 inch (25mm) as necessary.	+½ ”, -½ ”
	On curves with 4.5 meter (15ft) radius or less use radial joints of Curved curb as indicated. Optimum width: 1 inch (25mm).	+½ ”, -½ ”
• Length of Stones	Minimum and maximum specified lengths	See plan

2.012 BITUMINOUS CONCRETE PAVING

2.012.1 WORK INCLUDED

A. Bituminous concrete paving and associated preparatory work.

B. Gravel subbase.

C. Final grading of subbase.

D. Installation of subbase, binder course and wearing course.

2.012.2 REFERENCE STANDARDS

A. ASTM D1557 - Tests for Moisture - Density Relations of Soils and Soil - Aggregate Mixtures, Using 10-lb Rammer and 18-Inch Drop; Modified Proctor.

B. ASTM D2922 - Tests for Density of Soil and Soil-Aggregate in Place by Nuclear Methods (Shallow Depth).

C. State of New Hampshire Department of Transportation (NHDOT) Standard Specifications for Road and Bridge Construction (latest edition).

2.012.3 SUBMITTALS

Submit job mix data to DPW as required by NHDOT Standard Specification Division 300 and Division 400.

2.012.4 MATERIALS

A. Bankrun Gravel and Crushed Gravel: See Section 2.08 EXCAVATING, BACKFILLING AND COMPACTING.

B. Bituminous binder course shall be Type B (3/4 inch) per NHDOT Specification Section 401; Sub-Section 2 - Materials.

C. Bituminous wearing course shall be Type F (3/8 inch minimum) per NHDOT Specification Section 401; Sub-Section 2 - Materials.

D. Temporary Bituminous Trench Pavement shall be Type B (1/2 inch minimum) per NHDOT Specification Section 401; Sub-Section 2 - Materials.

E. Bituminous Overlay shall be Type F (3/8 inch minimum) per NHDOT Specification Section 401; Sub-Section 2 - Materials.

F. Emulsified Asphalt: NHDOT Section 410.

2.012.5 GENERAL EXECUTION REQUIREMENTS

A. Bituminous concrete material shall be placed in accordance with NHDOT requirements and as specified herein. If there is a discrepancy between the requirements, the more stringent requirement shall govern. The specific gravity of the compacted bituminous pavement shall not be less than 97 percent of the specific gravity of the corresponding daily job sample except as follows:

   a. Pavement placed directly on gravel base - 95 percent.

   b. Overlay paving less than 1-1/4 inch in compacted thickness - 95 percent.

B. Areas to receive bituminous paving shall be as shown on the approved plans. The edge of the existing pavement, at the limits of the paving, shall be saw cut and cold planed. All existing bituminous paving damaged by construction shall be repaired or removed.

C. Bituminous concrete paving mixture shall be placed only when the proper density can be obtained. Precautions shall be taken at all times to compact the mixture while the mixture is in the proper temperature range. The mixture shall not be placed on any wet surface or when weather conditions prevent its proper handling or finishing.

D. The number of paving courses and the thickness of each course shall conform to the approved plans or to the dimensions stated in this Section.

E. The wearing course shall not be installed on new development roadways until base has been in place one (1) winter season.

F. No permanent base pavement shall be placed after November 1 or prior to April 15 and no wearing pavement shall be placed after October 15 or prior to April 15, unless given specific written approval by the DPW Director.

G. On new roadways, there shall be no excavation within the roadway after placement of the binder pavement for five (5) years except in an emergency, as approved by the DPW Director.

H. Temporary pavement shall be hot bituminous pavement.

I. Base pavement shall be flush with a minimum of four (4”) inches of base or to match the final road thickness. Prior to final pavement, plain out one and a half (1.5”) inches and then cover with binder. Please see Appendix III for Roadway Standards Charts.

2.012.6 COMPACTION TESTING

Compaction testing will be performed in accordance with ASTM D1556, ASTM D1557, ASTM D2167 or ASTM D2922.

2.012.7 EQUIPMENT

A. Paver: Shall be a self-contained, self-propelled paver capable of spreading the required thickness and width of pavement. Short bodied pavers and hot boxes shall not be allowed.

B. Roller: Eight (8) to twelve (12) ton self-propelled tandem vibratory drum roller and rubber tire roller per NHDOT specifications.

2.012.8 EXECUTION OF PAVING

A. All humps in the pavement from blasting operations or caused by the equipment shall be removed before paving. All loose pieces of pavement on the edge of the trench shall be removed and the edges saw cut and cold planed before paving.

B. Edges of pavement removed during trenching or other excavations shall be saw cut and cold planed to provide one (1’) foot minimum overlap of the final patch on undisturbed material. The disturbed areas shall receive crushed gravel base course to the depth equal to the existing depth or the depth shown on the approved plan, whichever is greater.

C. During trenching, all remaining asphalt surfaces that are less than four (4’) feet wide after the pavement has been cut back a minimum of one (1’) foot shall be removed and replaced with new pavement.

D. Weather Limitations: Mixtures shall be placed only when the underlying surface is dry, frost free and the surface temperature is forty (40) degrees F and rising, for courses greater than one and one fourth (1¼) inches in compacted depth and above fifty (50) degrees F and rising, for courses less than one and one fourth (1¼) inches in compacted depth, or as determined by the DPW or designated representative.

E. Clean edges of existing pavement and coat with emulsified asphalt prior to placement of the new pavement in accordance with NHDOT Specification Section 401.

F. The temperature of the bituminous pavement shall be a minimum of two hundred and seventy-five (275) degrees and a maximum of three hundred and fifty (350) degrees F when it is placed.

G. Placing of any course shall be as nearly continuous as possible, keeping the number of transverse joints at a minimum. Stopping of the paver shall only be done in emergencies. If the DPW or designated representative determines that the paving operations result in excessive stopping of the paver, he may suspend all paving operations until the contractor, developer and/or owner makes arrangements to synchronize the rate of paving with the rate of delivery of material.

H. All surfaces and trenches four (4') feet wide and greater shall use an approved self-propelled paver to apply the mix.

I. Any displacement occurring as a result of reversing the direction of a roller, or from other causes, shall be corrected at once by the use of lutes and addition of fresh mixture when required. Care shall be exercised in rolling not to displace the line and grade of the edges of the bituminous mixture.

J. All courses shall be rolled until all roller marks are eliminated.

K. All joints between existing and new pavement shall receive a bead of emulsified asphalt and sand, after the new pavement has been placed, to ensure proper adhesion.

L. All valve boxes, catch basins, and manhole castings shall be reset as required.

M. Unless otherwise authorized by the DPW or designated representative, the final wearing course shall not be placed until after guard rail posts have been set and general cleanup has been completed.

N. Bituminous wearing and binder courses shall be constructed in full compliance with the latest edition of NHDOT Standard Specifications for Road and Bridge Construction; Section 401 - Pavements; Sub-Section 3 - Construction Requirements.

O. The minimum thickness of permanent pavement shall be two and a half (2½") inches of binder and one and a half (1½") inches of wearing unless approved and specified otherwise.

2.012.9 TEMPORARY TRENCH PATCH

A. All temporary trench patches shall be hot bituminous pavement.

B. A temporary trench patch shall be placed upon a properly installed subbase, on the day that the existing pavement is removed.

C. The minimum thickness of temporary pavement shall be four (4") inches on all roadways and three (3") inches on sidewalks.

D. The contractor, developer and/or owner shall maintain and/or repair the trench as often as necessary including placement of additional asphalt to fill any areas that have settled so that the surface is flush with the existing pavement surface. Work shall be performed by the direction of the DPW or designated representative.

E. Temporary pavement shall be placed in accordance to the specifications stated herein.

F. Temporary pavement shall remain in the trench for a minimum of thirty (30) days and a maximum that will be determined by the DPW or designated representative, and replaced immediately with permanent patch as specified herein.

2.012.10 PERMANENT TRENCH PATCH

A. The contractor, developer and/or owner shall remove temporary trench patch, regrade subbase and install permanent trench patch as specified upon authorization by the DPW or designated representative.

B. Permanent trench patch shall be a minimum of two and a half (2½”) inches of binder course mix and a minimum of one and a half (1½”) inches of top course mix in two separate and compacted layers for a minimum total of four (4”) inches or as shown on the approved plans.

C. The contractor, developer and/or owner shall sweep the entire roadway surface just prior to placing the wearing course, if the DPW or designated representative thinks there is excess sand and/or debris on the road.

2.012.11 REPLACEMENT OF COURSE

A. If any imperfect places are found in any course, the contractor, developer and/or owner shall remove the unsatisfactory material and replace it with satisfactory material after coating the exposed edges with suitable emulsified asphalt.

B. If any high areas are found after placement of the base course the contractor, developer and/or owner shall cut out the areas and refill them with approved material before the final wearing course is placed to the approval of the DPW or designated representative.

C. If any low areas are found after placement of the base course the contractor, developer and/or owner shall shim the areas before the final wearing course is placed to the approval of the DPW or designated representative.

2.012.12 CLEANUP

Any bituminous material remaining on exposed surfaces of curbs, sidewalks, or other masonry structures , as well as material left from truck cleanup area(s) shall be removed by the contractor, developer and/or owner.

.

2.012.13 OVERLAY AND NEW BITUMINOUS PAVEMENT FOR ROADS

A. Roadway centerline offset stakes shall be set one (1') foot from the edge of the roadway shoulder at fifty (50') foot intervals so that the centerline can be replaced in its original location.

B. The contractor, developer and/or owner shall then sweep all roadway surfaces just prior to placing a shim, overlay or wearing course.

C. The contractor, developer and/or owner shall cold plane a joint in the existing pavement, on all street tie-ins, to accept the new overlay material. The joint shall be one (1") inch deep at the edge and slope up to the existing pavement surface at a point five (5') feet away from the joint edge and/or per direction of DPW or designated representative. Place a two (2') foot wide strip of emulsified asphalt along the joint.

D. For new road construction or complete width road reconstruction, the binder course shall be placed prior to raising or adjusting manhole covers, catch basin grates and valve boxes. The binder course shall be two and a half (2½") inch thickness of three-quarter (¾") inch binder (NHDOT Section 401 Type B).

E. The contractor, developer and/or owner shall raise all manhole covers, catch basin grates, and valve boxes prior to the overlay or wearing course. The final elevation of these fixtures shall be flush with final grade to a quarter-inch (¼") below the final pavement elevation.

F. Apply uniform emulsified asphalt tack coat over the entire binder course.

G. Place the bituminous overlay to the limits shown on the approved plan.

H. The overlay shall be placed the full width of the roadway, unless approved and specified otherwise.

2.012.14 APPROVALS

All work shall be performed to the satisfaction of the DPW or designated representative.

2.013 SUBSURFACE DRAINAGE SYSTEMS

2.013.1 WORK INCLUDED

A. Furnishing pipe, cleanouts, fabric, coarse filter aggregate, wall drain, and other material required for the installation of subsurface drainage system(s).

B. Installation of subsurface drainage systems.

2.013.2 REFERENCE STANDARDS

ASTM D3212 - Joints for Drain and Sewer Plastic Pipes Using Flexible Elastomeric Seals.

ASTM F667 - Smooth-Wall Corrugated High-Density Polyethylene (SPE) Plastic Underdrain Systems.

2.013.3 PIPE PROTECTION

Pipe and fittings stored on the site shall be stored in the protective unit packages provided by the manufacturer. If packages need to be opened, the pipe shall be stored on a flat surface and not in direct contact with the ground. Do not stack higher than four feet. Keep inside of pipe and fittings free from dirt and debris. Care shall be exercised to avoid compression damage or deformation to the pipe.

All pipe and fittings that are stored shall be covered to provide protection from the sunlight.

2.013.4 ACCEPTABLE MANUFACTURERS

Specifications are based on materials produced by the following manufacturers:

A. ADS pipe - Advanced Drainage System, Inc. or approved equal.

B. Filter fabric - Mirafi, Inc. or approved equal.

C. Or other engineered, approved materials as approved by DPW.

2.013.5 PIPE MATERIAL

Subsurface drainage pipe shall consist of perforated and solid wall pipe in the sizes indicated on the approved plans. Drainage pipe shall be Smooth Wall Corrugated High-Density Polyethylene (SPE) and shall meet the requirements of ASTM F667. Perforations shall be in two rows, one row on each side, 60° degrees above bottom centerline of the pipe. Joints shall be single rubber gasket bell and spigot type in accordance with ASTM D3212.

Fittings shall be suitable for use with the specified strength pipe and shall not deflect more than the pipe when loaded and bedded in the same manner.

Couplings shall be flexible, non-hardening PVC sleeves with double stainless steel bands including stainless steel hardware.

2.013.6 FABRIC

Fabric required as part of the subsurface drainage system shall be Mirafi 140N or other engineered, approved materials as approved by DPW

2.013.7 COARSE FILTER AGGREGATE

Coarse filter aggregate shall be clean, well graded natural gravel or crushed stone; free from shale, clay, organic materials and debris; graded within the following limits:

Sieve Size	Percent Passing
1-1/2 inch	100
1 inch	90 - 100
3/4 inch	45 - 100
5/8 inch	30 - 85

2 inch	13 - 55
3/8 inch	0 - 30
3 inch	0 - 15
No. 4	0

2.013.8 INSTALLATION

A. Subsurface drainage systems shall be installed at the locations and depths shown on the approved plans. Pipe shall be in sound, undamaged condition and shall be installed in compliance with the manufacturer's recommendations.

B. Subsurface drainage systems shall be installed to insure that groundwater flowing in the permeable material around the pipes is intercepted and carried to the drain system unimpeded.

C. Perforated pipe shall be installed with perforations on the pipe aligned with the bottom of the trench, symmetrical about the vertical axis.

D. Filter fabric shall be installed as shown on the approved plans and in accordance with the manufacturer's recommendations. Overlaps of filter fabric shall be a minimum of eighteen (18”) inches.

E. The contractor, developer and/or owner shall:

1. Provide for temporary diversion of water to permit the installation of pipe in a reasonably dry trench.

2. Lay pipe and fittings in accordance with the manufacturer’s recommendations and these specifications.

F. Excavation and backfill shall be in accordance with Section 2.08 Excavation, Backfilling and Compacting.

2.014 STORM DRAINS

2.014.1 WORK INCLUDED

A. All work shall conform to OSHA standards.

B. Furnishing pipe for storm drains.

C. Installing and/or removing and replacing storm drains as shown on the approved plans.

2.014.2 REFERENCE STANDARDS

AASHTO M170 - Reinforced Concrete Pipe.

ASTM D3212 - Joints for Drain and Sewer Plastic Pipes Using Flexible Elastomeric Seals.

ASTM F405 - Standard Specifications for Corrugated Polyethylene pipe and fittings. ASTM F667 Standard Specifications for large diameter Corrugated Polyethylene pipe and fittings.

2.014.3 SUBMITTALS

Submit for approval manufacturer's certifications and shop drawings to the project engineer, DPW or designated representative.

2.014.4 QUALITY CONTROL

A. The quality of all materials, the process of manufacture and the finished pipe shall be subject to inspection by the DPW or designated representative. Such inspection may be made at the place of manufacture, and or on the work site after delivery. Pipe shall be subject to rejection at any time on account of failure to meet any of the Specification requirements, even though sample pipe may have been accepted as satisfactory at the place of manufacture. Pipe rejected after delivery to the site shall be marked for identification and shall be removed from the site at once. All pipes which have been damaged after delivery will be rejected, or if already installed, shall be repaired, or removed and replaced by the contractor, developer and/or owner, as directed by the DPW or designated representative.

B. All sections shall be inspected for general appearance, dimensions, soundness, etc. in accordance with pipe manufactures specifications. The surface of concrete pipe shall be dense, close-textured and free of blisters, cracks, roughness and exposure of reinforcement.

C. Imperfections may be repaired, subject to the approval of the DPW or designated representative, after demonstration by the manufacturer that strong and permanent repairs would result. Repairs shall be carefully inspected before final approval. Cement mortar used for repairs shall have a minimum compressive strength of 4,000 psi at the end of seven (7) days and 5,000 psi at the end of twenty eight (28) days when tested in two (2”) inch cubes stored in the standard manner.

D. Pipe shall not be shipped or subjected to interior or exterior loadings until five (5) days after fabrication and/or repair and the concrete has attained a compressive strength of 3000 psi.

E. Care shall be exercised in unloading pipe from delivery trucks. Concrete pipe shall not be dropped from trucks. An attached loading/unloading device or proper equipment shall be used. Defective pipe which cannot be repaired to the satisfaction of the DPW or designated representative shall be promptly removed from the project and replaced with new pipe.

2.014.5 GENERAL PRODUCTS

All products included in this section shall conform to the requirements of the standard specifications referenced herein. Pipe size and material shall be as shown on the approved plans.

2.014.6 MATERIALS

Reinforced Concrete Pipe (RCP): Pipe and fittings shall conform to AASHTO M170, Class IV, or Class V as appropriate, Wall B. Cement shall be Type II.

Smooth Interior Corrugated High-Density Polyethylene Pipe (SPE): Pipe and fittings shall conform to ASTM F405 or ASTM F667, AASHTO M252 and M294. HDPE pipe adaptors must be used for transition to drainage structures.

A. Each length of pipe shall be marked or tagged with the nominal diameter, gauge or class, the name of the manufacturer or his trademark, and in the case of reinforced concrete pipe, the date of manufacture.

B. Backfill material shall be as specified in Section 2.08.

C. The pipe material to be used shall be determined after a site visit by the contractor/ developer, the Design Engineer, and the Department of Public Works. If in the opinion of the Department of Public Works, perforated SPE pipe is required, the contractor, developer and/or owner shall use said pipe.

2.014.7 HANDLING PIPE

Care shall be exercised in moving pipe to its final position. The use of slings, straps and/or other devices to support pipe when lifted shall be required. Transporting pipe from storage areas shall be restricted to operations which will not cause damage to the pipe. Pipe shall not be dropped into the trench.

All pipe shall be examined before laying and no pipe shall be installed which is found to be defective. Defective pipe which cannot be repaired to the satisfaction of the DPW or designated representative shall be promptly removed from the project and replaced with new pipe.

2.014.8 CONTROL OF ALIGNMENT AND GRADE

A. Easement, property and other control lines necessary for locating the work, as well as elevations and bench marks used in the design of the work shall be shown on the approved plans. The contractor, developer and/or owner shall use this information to set line and use a laser, level, or transit to set grade.

B. Laser equipment shall be used to assist in setting the pipe and the operator of the laser must demonstrate satisfactory skill in its use. The use of string levels, hand levels, carpenter's levels or other similar devices for transferring grade or setting pipe will not be permitted.

C. The contractor, developer and/or owner shall not proceed until he has made timely request of the DPW or designated representative, and has received back within two (2) business days, such controls and instructions as may be necessary as work progresses. The work shall be done in strict conformity with such controls and instructions.

D. The contractor, developer and/or owner shall carefully preserve bench marks, reference points and stakes, and in case of willful, careless, or accidental destruction by own employees, the contractor, developer and/or owner will be responsible for the resulting cost to re-establish such destroyed control data and shall be responsible for any mistakes or delay that may be caused by the loss or disturbance of such control data.

E. Proper alignment shall be maintained in laying pipe.

2.014.9 EXCAVATING TRENCH AND INSTALLING PIPE

A. Pipe shall be laid in dry trench conditions. Temporary diversion of water shall be required.

B. Trench shall be excavated to required depth sufficiently wide to allow for jointing of the pipe and compaction of the material under and around the pipe. Excavation shall conform to Section 2.08. If ledge rock, rocky soil, hard pan or other unyielding foundation material is encountered at the normal grade of the pipe bed, excavate to six (6”) inches below invert grade and one (1’) foot on each side of the interior face of the pipe wall and refill with compacted crushed stone. Blocking is not permitted.

C. Disturbed trench bottom shall be compacted and shaped to fit pipe for a depth of not less than ten (10%) percent of the total diameter of the pipe. The pipe shall rest firmly on the shaped bottom for the entire length of pipe barrels. Excavate troughs to accommodate bells or couplings to provide ample space for jointing pipe.

D. Laying of pipe shall begin at outlet and the lower segment of the pipe shall be in contact with the shaped trench bottom throughout its full length. Each pipe section shall be placed into position on the pipe bed in such a manner and by such means required to avoid injury to persons, any property or the pipe.

E. Handling hole in concrete pipes shall be filled with a precast plug, seal and cover with mastic or mortar.

F. Time shall be allowed for inspection and approval before any backfill is placed. Relay any pipe out of alignment and remove any damaged pipe.

G. After placing pipe on shaped trench bottom, backfill material shall be placed and compacted to the spring line (horizontal center line) of the pipe in continuous layers not exceeding six (6”) inches loose depth. Additional backfill material shall then be placed from the spring line to twelve (12”) inches above the crown of the pipe. This material shall be placed and compacted in continuous layers not exceeding six (6”) inches loose depth.

H. After placement of the material around and over the pipe, alignment and grade of the pipe shall be checked. If the pipe has been properly installed, the contractor, developer and/or owner may refill or backfill the remainder of the trench in conformance with Section 2.08, and details shown on the approved plans.

I. At the end of each day's work or at other intervals, the DPW or designated representative, with the contractor, developer and/or owner, may inspect the pipe installation. Unsatisfactory work shall be dug up and reinstalled to meet the requirements of the Town Construction Standards.

2.014.10 JOINTING PIPE

Reinforced concrete pipe: Bell and Spigot, or Tongue and Groove type reinforced concrete pipe shall be used. When storm sewer is an extension of existing concrete pipe, joint type shall be used to match. Ends of pipe shall be pushed home and the inner surfaces to be flush and even.

Joints shall be made with oil resistant compression rings of an elastomeric material conforming to ASTM C443. Manufacturer's installation instructions shall be followed.

Smooth Interior Corrugated High-Density Polyethylene Pipe (SPE): Pipe joints, fitting joints and double-bell couplers shall be furnished with rubber gasketed connections.

2.015 STEEL BEAM GUARDRAIL

2.015.1 WORK INCLUDED

A. Furnishing single-face beam guardrail, composed of steel rail elements mounted on pressure treated wood posts.

B. Roadway guardrail is required on all slopes greater than 3:1 and as directed by the Department of Public Works.

C. Installation.

2.015.2 REFERENCE STANDARDS

AASHTO M180 - Corrugated Sheet Steel Beams for Highway Guardrail.

ASTM A123 - Zinc (Hot-Galvanized) Coatings on Products Fabricated from Rolled, Pressed, and Forged Steel Shapes, Plates, Bars and Strips.

ASTM A153 - Zinc Coating (Hot-Dip) on Iron and Steel Hardware.

ASTM A307 - Carbon Steel Externally Threaded Standard Fasteners.

ASTM A606 - Steel Sheet and Strip, Hot-Rolled and Cold-Rolled, High Strength, Low-Alloy, with Improved Atmospheric Corrosion Resistance.

State of New Hampshire Department of Transportation (NHDOT) Standard Specifications for Road and Bridge Construction (latest edition).

2.015.3 MATERIALS

A. Wood posts and offset blocks shall be Red Pine, Pitch Pine, Norway Pine, Southern Yellow Pine, or other approved wood, straight, sound and cut from live timber. Posts and offset blocks shall be sawn to the nominal dimensions shown on the approved plans. All wood posts and offset blocks shall be treated with preservative, full length in accordance with the NHDOT, Section 606.

B. Standard steel beam guardrail, terminal sections, bolts, nuts and other fixtures shall conform to the requirements of AASHTO M180, Class A and shall be zinc coated (galvanized) after fabrication with Type II coating. In addition, the guardrail elements shall be fabricated from steel sheet conforming to the requirements of ASTM A606, Type 4 (corrosion resistant). The effective length of beam shall be twelve (12’) feet, six (6”) inches.

C. Steel beams shall be shop punched to allow for six (6’) foot, three (3”) inch post spacing. Where the rail is on a curve having a radius of one hundred fifty (150’) feet or less, the

rail shall be shop curved. The plates at the splice shall make contact throughout the area of the splice. Guardrail parts furnished under this specification shall be interchangeable with similar parts, regardless of the source of manufacture.

D. Terminal end section shall be NHDOT approved G-2, EGERT or ELT units as follows:
   1. Under 20 MPH Design Speed - G-2
   2. Under 40 MPH, over 20 MPH - EGERT
   3. Over 40 MPH - ELT

E. A twelve (12”) inch square adhesive reflective strip shall be placed at the end of all terminal sections.

F. Plastic reflective devices on the guardrail center beam shall be provided at twelve (12’) feet, six (6”) inches, on center.

INSTALLATION
Posts: Post spacing shall be six (6’) foot, three (3”) inch on center. Posts shall be set plumb to full depth indicated, and accurately aligned and spaced as indicated on the approved plans. Any space around the posts shall be backfilled with suitable material in six (6”) inch layers and thoroughly compacted.

Rail elements: The rail elements and terminal pieces shall be erected to the required grade, and the top of the rail shall be in a straight line or shall have a smooth continuous curve parallel to the road and/or curb. All bolts, except adjustment bolts, shall be drawn tight. Bolts shall be of sufficient length to extend beyond the nuts. No punching, drilling, reaming, cutting or welding of rail elements or terminal pieces will be permitted in the field except where specifically approved, in writing, by the DPW or designated representative.

FIELD PAINTING
Galvanized surfaces and fittings that have been abraded so that base metal has been exposed and threaded portions of all fittings and fasteners and the cut end of all bolts shall be cleaned and painted with two (2) coats of field galvanizing coating.

All posts shall have beveled top and shall be framed before being treated with preservatives.

2.016 RESTORATION OF GROWTH - CLASS A (LAWN)

2.016.1 REFERENCE STANDARDS

NH Stormwater Manual: Volume 3, Chapter 4 Construction Phase Erosion & Sediment Controls Tables 4-2 & 4-3, as amended. (See Appendix IV. Full Manual available at Departments of Public Works and Community Development or online at DES website: http://des.nh.gov)

A. Table 4-2 Seed Mixture Selection Based on Soil Type

B. Table 4-3 Seed Mixture for Permanent Vegetation

2.016.2 WORK INCLUDED

Finishing, loaming, grading, fertilizing, seeding and maintaining all seeded areas as shown on the approved plans and/or specified herein, and any other areas disturbed by the contractor, developer and/or owner’s operations.

A. All work shall conform to OSHA standards.

B. Class A growth restoration shall apply to all lawn or park type areas disturbed during construction.

C. Restore growth in all areas to a condition at least fully equal to that prevailing prior to the construction.

D. Submit all seed tags to DPW for verification.

2.016.3 PRODUCT DELIVERY AND STORAGE

Fertilizer shall be delivered to the site in the original unopened containers showing the manufacturer's guaranteed analysis, and stored so it shall be dry and free flowing when used.

Lime shall be delivered and maintained in a dry, free flowing condition until used.

Seed shall be delivered in sealed containers bearing the dealer's guaranteed analysis and stored in a dry, protected place.

2.016.4 MATERIALS

A. Topsoil shall be friable, fertile, natural free-draining loam, typical of the locality; free of subsoil, roots, grass, sticks, weeds, clay, sod lumps, debris and stones larger than one (1”) inch in maximum dimension. Soil shall not be excessively acid or alkaline, nor contain toxic material harmful to plant growth.

B. Fertilizer shall be a complete commercial fertilizer, 10-20-20 grade.

C. Lime shall be ground limestone containing not less than 95% calcium and magnesium carbonates.

D. Seed shall be from the current year or previous year's crop and shall have not more than 1% weed content. Seed shall also meet the following requirements:
   a. Grass seed of the specified mixtures shall be furnished in fully labeled, standard, sealed containers.

   b. Percentage and germination of each seed type in the mixture, purity and weed seed content of the mixture shall be clearly stated on the label.

   c. Seed tags shall be provided to DPW for verification.

   d. The weight of Pure Live Seed (PLS) is computed by the labeled purity percent, times the labeled germination percent, times the weight. To illustrate the method of computing to PLS from the tag basis, the following example is given:

Required: 20 lbs PLS of a particular variety
Stock Available: 99.41% pure and 92% germination

20 lbs / (0.9941 x 0.92) = 21.87 lbs to be obtained

E. Class A shall normally be used on loam areas. This seed shall conform to the following and shall be furnished on a PLS basis.

CLASS A
or see Appendix IV Seed Mixtures

Kind of seed	PLS per Acre, lbs
Red Fescue (creeping)	21
Kentucky Bluegrass	21
Redtop	21
Perennial Ryegrass (Manhattan)	21
TOTAL	84

F. Straw mulch shall consist of mowed and properly cured grass or legume mowings, reasonably free from swamp grass, weeds, twigs, debris or other harmful material. It shall be free from rot or mold.

G. Mulch Anchoring: When mulch must be held in place, Mulch Netting shall be used to anchor the mulch. Mulch Netting can be paper, twine, plastic, or plastic and wood fiber.

2.016.5 EXECUTION OF GROWTH RESTORATION

A. The subgrade of all areas to be loamed for seed or ground cover shall be raked and all rubbish, sticks, roots, and stones larger than one (1”) inch in maximum dimension removed. Loam shall be spread and lightly compacted to finished grade as shown on the approved plans. When finished grades are not indicated, they shall be uniform between the points for which finished grades are given, or from such points to existing grades, except that the top and bottom of slopes shall be rounded. Compacted loam shall not be less than the depth specified. No loam shall be spread in water or while frozen or muddy.

B. After the loam is placed and before it is raked to true lines and rolled, lime shall be spread evenly over loam surface and thoroughly incorporate into the loam by heavy raking to at least one-half (½) the depth of the loam.

C. Fertilizer shall be uniformly spread and immediately mixed with the upper two (2”) inches of loam.

D. Immediately following this preparation, the seed shall be uniformly applied evenly in two (2) intersecting directions and the seed lightly rolled into the surface. The surface shall then be lightly rolled and watered with a fine spray.

E. Seed or hydroseeding shall be sown in a favorable season, as approved by the DPW or designated representative, typically between September 15 and October 15 and between April 15 and June 1. Seeding shall not be done during windy weather when ground is frozen, excessively wet or otherwise untillable.

F. Promptly thereafter or within 24 hours after the seeding operation, the area shall be lightly and uniformly mulched with straw. Straw shall be spread by hand or with machine.

G. Mulch shall be anchored on all slopes exceeding 5% and other areas as required using Mulch Netting. Mulch Netting shall be spread over loose mulch and pinned to the soil in accordance with the manufacturer's instructions.

H. Washouts shall be protected against by an approved method. Any washout which occurs shall be regraded and reseeded.

2.016.6 APPLICATION RATES

Loam: Loam shall be placed to a minimum depth of four (4”) to six (6”) inches compacted, or as shown on the drawings.

Lime: Lime shall be applied at the rate of 75 to 100 lbs per 1,000 square feet.

Fertilizer: Fertilizer shall be applied at the rate of 30 lbs per 1,000 square feet.

Seed: Seed shall be applied at a rate of at least 87 lbs per acre or 2 lbs per 1,000 square feet or per supplier’s recommendations. Seed used in hydroseeding applications shall be in conformance with approved hydroseeding rates.

Mulch: Mulch shall be applied at the rate of 90 lbs per 1,000 square feet.

2.016.7 MAINTENANCE

All seeded areas shall be maintained and watered so as to be kept in healthy condition, and reseeded if and when necessary until a good, healthy, uniform growth is established over the entire area seeded. Areas shall be maintained in an approved condition until final acceptance of growth by the DPW or designated representative. The maintenance shall include repairs for damage caused by erosion.

2.017 RESTORATION OF GROWTH - CLASS B (FIELD)

2.017.1 REFERENCE STANDARDS

NH Stormwater Manual: Volume 3, Chapter 4 Construction Phase Erosion & Sediment Controls Tables 4-2 & 4-3, as amended. (See Appendix IV. Full Manual available at Departments of Public Works and Community Development or online at DES website: http://des.nh.gov)

A. Table 4-2 Seed Mixture Selection Based on Soil Type

B. Table 4-3 Seed Mixture for Permanent Vegetation

2.017.2 WORK INCLUDED

Finishing, furnishing and placing loam, grading, fertilizing, seeding and maintaining all seeded areas within limits shown on the approved plans and/or specified herein, and any other areas disturbed by the contractor, developer and/or owner’s operations.

A. Class B restoration shall apply to slope or field type areas disturbed during construction.

B. Restore growth in all areas to a condition at least fully equal to that prevailing prior to the construction.

2.017.3 PRODUCT DELIVERY AND STORAGE

Fertilizer shall be delivered to the site in the original unopened containers, each showing the manufacturer's guaranteed analysis and stored so it shall be dry and free flowing when used.

Lime shall be delivered and maintained in a dry, free flowing condition until used.

Seed shall be delivered in sealed containers bearing the dealer's guaranteed analysis and stored in a dry, protected place.

2.017.4 MATERIALS

A. Loam shall be the surface layer of natural workable soil containing a minimum of five (5%) percent organic matter, or material of a nature capable of sustaining the growth of vegetation, with no admixture of refuse or material toxic to plant growth. It shall be free from stones, lumps, sterile soil, stumps or similar objects larger than two (2”) inches in maximum dimension, roots and brush.

B. Fertilizer shall be a complete commercial fertilizer, 10-10-10 grade.

C. Lime shall be ground limestone containing not less than ninety-five percent (95%) calcium and magnesium carbonates.

D. Seed shall be from the same or previous year's crop and shall have not more than one (1%) percent weed content. Seed shall also meet the following requirements:
   a. Grass seed of the specified mixtures shall be furnished in fully labeled, standard, sealed containers.

   b. Percentage and germination of each seed type in the mixture, purity and weed seed content of the mixture shall be clearly stated on the label.

   c. The weight of PLS is computed by the labeled purity percent, times the labeled germination percent, times the weight. To illustrate the method of computing to PLS from the tag basis, the following example is given:

      Required: Twenty (20) pounds PLS of a particular variety
      Stock Available: 99.41% pure and 92% germination

      20 lbs / (0.9941 x 0.92) = 21.87 lbs to be obtained

E. This seed mixture shall be placed on all pasture areas. This seed shall conform to the table below unless amended by the Town of Milford to suit special local conditions encountered. This seed shall be furnished on a PLS basis.

PASTURE RESTORATION
or see Appendix IV Seed Mixtures

Kind of Seed		PLS per Acre, lbs
Bluegrass		23.6
Timothy		14.0
Ladino Clover		2.4
Redtop		15.0
	TOTAL	55.0

F. Class B shall normally be used for all slope work. This seed shall conform to the table below unless the change is approved by the DPW or designated representative to suit special local conditions encountered. This seed shall be furnished on a PLS basis.

CLASS B
or see Appendix IV Seed Mixtures

Kind of Seed		PLS per Acre, lbs
Tall Fescue (Alta or K-31)		20
Perennial Ryegrass (Manhattan)		15
Red Fescue (Creeping)		5
Red Clover		5
Birdsfoot Trefoil (Empire variety preferred)		5
	TOTAL	50

G. Red clover and bird's-foot trefoil seed shall include not more than twenty-five (25%) percent hard seed. If necessary, to meet this requirement, extra seed shall be supplied.

H. Inoculum specific to red clover and Birdsfoot trefoil must be used with this mixture. The inoculum shall be a pure culture of nitrogen-fixing bacteria selected for maximum vitality and the ability to transform nitrogen from the air into soluble nitrates and to deposit them in the soil. The inoculum shall not be used later than the date indicated on the container or later than specified. The inoculum shall be subject to approval. If seeding by hand, a sticking agent such as milk or cola shall be used to stick inoculum to the seed. If seeding with hydroseeder, use four (4) times the recommended amount of inoculum.

I. Straw mulch shall consist of mowed and properly cured grass or legume mowings, reasonably free from swamp grass, weeds, twigs, debris or other deleterious material. It shall be free from rot or mold.

J. Mulch Anchoring: When mulch must be held in place, Mulch Netting shall be used to anchor the mulch. Mulch Netting can be paper, twine, plastic, or plastic and wood fiber.

2.017.5 GENERAL EXECUTION

A. Subgrade of all areas shall be raked to receive humus and all rubbish, sticks, roots and stones larger than two (2”) inches in maximum dimension removed. Loam shall be spread and lightly compacted to finished grade as shown on the approved plans. When

finished grades are not indicated, they shall be uniform between the points for which finished grades are given, or from such points to existing grades, except that the top and bottom of slopes shall be rounded. Compacted humus shall not be less than the depth specified. No loam shall be spread in water or while frozen or muddy.

B. Lime shall be spread after the humus is placed and before it is raked to true lines and rolled. Lime shall be evenly and thoroughly incorporated into the humus by heavy raking to at least one-half (½) the depth of the humus.

C. Fertilizer shall be uniformly spread and immediately mixed with the upper two (2”) inches of humus.

D. Immediately follow this preparation, seed shall be applied uniformly and evenly in two (2) intersecting directions and lightly raked into the surface. The surface shall be lightly raked and watered with a fine spray.

E. Seed shall be sown in a favorable season as approved by the DPW or designated representative, typically between September 15 and October 15 and between April 15 and June 1. Seeding shall not be done during windy weather or when the ground is frozen, excessively wet or otherwise untillable.

F. Promptly thereafter or within twenty-four (24) hours after the seeding operation, mulch shall be spread lightly and uniformly throughout the area with straw. Straw shall be spread by hand or with machine.

G. Mulch shall be anchored on all slopes exceeding five percent (5%) and other areas as required using Mulch Netting. Mulch Netting shall be spread over loose mulch and pinned to the soil in accordance with the manufacturer's instructions.

H. Protect against washouts by an approved method. Any washout which occurs shall be regraded and reseeded.

2.017.6 APPLICATION RATES

Humus: Humus shall be spread over properly prepared areas to give a covering which will be a minimum of four (4”) inches.

Lime: Lime shall be applied at the rate of fifty (50) pounds per one thousand (1000) square feet.

Fertilizer: Fertilizer shall be applied at the rate of twenty-five (25) pounds per one thousand (1000) square feet.

Seed: Seed shall be applied at a rate of at least fifty (50) pounds (PLS) per acre or 1.2 pounds (PLS) per one thousand (1000) square feet.

Mulch: Mulch shall be applied at the rate of ninety (90) pounds per one thousand (1000) square feet.

2.017.7 MAINTENANCE

All seeded areas shall be maintained and watered so as to be kept in healthy condition, and reseeded if and when necessary until a good, healthy, uniform growth is established over the entire area seeded. Areas shall be maintained in an approved condition until final acceptance of growth by the DPW or designated representative. The maintenance shall include repairs for damage caused by erosion.

2.018 TREES AND SHRUBS

2.018.1 WORK INCLUDED

A. Furnishing trees and shrubs.

B. Installation.

C. Maintenance service.

D. Warranty.

2.018.2 REFERENCE STANDARDS

American Joint Committee on Horticultural Standards: Standardized Plant Names.

American Association of Nurserymen.

ANSI 260.1 - USA Standards for Nursery Stock.

2.018.3 DELIVERY, STORAGE, AND HANDLING

A. Plant materials shall be moved with solid root balls wrapped in burlap.

B. Plant materials shall be delivered to the site immediately prior to placement. Plant materials shall be kept moist.

C. When root ball of earth surrounding roots has been cracked or broken plants shall be rejected, prior to or during the process of planting.

D. When burlap, staves, and ropes required in connection with transplanting have been displaced prior to acceptance plants shall be rejected.

E. Plants shall be dug with root balls having minimum sizes as specified in ANSI 260.1.

F. Plants shall be dug, transported and handled with the utmost care to insure against injury and to provide adequate protection against wind and sun. Plants shall be securely covered with tarpaulin, canvas or other cover to minimize wind whipping and drying. The plant shall be kept moist at all times until planted. Under no circumstances shall balled plants be dropped to the ground. A suitable method of handling shall be employed to preclude cracked or mushroomed root balls at the point of delivery. All plant material shall be protected from freezing at all times prior to transplanting.

G. All plants shall have securely attached durable legible labels stating in weather resistant ink the correct botanical plant name.

H. All plants shall be subject to inspection by the DPW or designated representative during digging operations and after replanting. No plants shall be planted before inspection and approval by the DPW or designated representative. Any plants damaged by the contractor, developer and/or owner's operations shall be removed from the site immediately and replaced with acceptable plants without additional compensation.

2.018.4 WARRANTY

A one year warranty from date of final acceptance shall be provided to the Department of Public Works. During the warranty period plant materials found dead, or not in a healthy growing condition shall be replaced. Replacement plant materials shall be of same species, with the warranty commencing on date of replacement.

2.018.5 MATERIALS

A. Plants shall not be listed on *NH's Invasive Species List* or *NH's Invasive Species Watch List*.

B. Plants shall be of species and sizes called for on the approved plans and shall conform to all applicable provisions of the Horticultural Standards published by the American Association of Nurserymen. All plants shall have well developed and vigorous branch and root systems and shall be healthy and free of injury or any form of damage. All plant material will be subject to inspection and approval by the DPW or designated representative.

C. Planting Soil: Topsoil specified in Section 2.08.6 mixed five (5) parts topsoil, one (1) part peat moss. Fertilizer shall be added as required.

D. Peat Moss: Horticultural grade Class A decomposed plant material, elastic and homogeneous. Free of decomposed colloidal residue, wood, sulphur, and iron; pH value of 5.9 to 7.0, 60% organic matter by weight, moisture content not exceeding 15% and water absorption capacity of not less than 300% by weight on oven dry basis.

E. Mulching Material: Red bark chip mulch shall consist of softwood bark platelets, 1/8 inch to 3 inch nominal thickness, with 50 percent having an area of not less than one square inch or more than two square inches. All bark chip mulch shall be reasonably free from leaves, twigs, shavings, wood or other deleterious material.

F. Fertilizer shall be 5-10-10 delivered in standard manufacturer's bags, showing the weight, chemical analysis of the contents and the name of the manufacturer. At least 50% of the nitrogen in the fertilizer shall be from natural organic sources. Fertilizer shall be carefully stored and shall be dry and free-flowing at the time of application.

G. Bonemeal shall be commercial steamed bonemeal, finely ground with a minimum of 2.0% nitrogen and a minimum of 20% phosphoric acid, delivered in standard packages of the manufacturer, showing weight, analysis and name of manufacturer.

H. Tree wrap shall be burlap or special crepe weatherproof tree wrapping tape in two (2”) to eight (8”) inch width rolls.

I. Antidesiccant emulsion for tree spraying shall be antitransparent wax or similar concentrate specifically manufactured for horticultural use. It shall be delivered in manufacturer's original containers and mixed and applied according to manufacturer's label directions.

J. Support Stakes: Shall be wood.

K. Cables, Wire, Eye Bolts, and Turnbuckles: Shall be noncorrosive and of sufficient strength to withstand wind pressure.

2.018.6 PREPARATION

The contractor, developer and/or owner shall:

A. Verify topsoil is ready to receive the work of this Section.

B. Prepare topsoil to receive plant materials.

2.018.7 INSTALLATION

A. Plant materials shall be placed for review as necessary by the DPW or designated representative prior to installation.

B. Excavations for all plant material shall allow a minimum of one (1’) foot clearance around the sides of the root ball and six (6”) inches below the root ball to receive the backfill material.

C. All plants shall stand plumb and after settlement shall be at the same ground level at which they were growing before digging. Burlap and twine shall be cut away from the upper half of all root balls and the remaining burlap adjusted to prevent the formation of air pockets. Exposed and curled roots shall be spread in a natural position.

D. Backfill around plant balls shall be planting soil as specified. The plant ball shall be placed on a compacted planting base of the prepared planting soil with a minimum depth of six (6”) inches. Bonemeal as specified shall be mixed in the compacted base soil mixture at the rate of one (1) cup per diameter inch for trees and one-half (½) cup per shrub. Planting soil shall be backfilled in six (6”) inch layers, firmly tamping and watering each layer. Excess topsoil shall be used to form a berm approximately four (4”) inches high around the pit planting area to provide a saucer for watering.

E. Fertilizer as specified shall be evenly distributed on the surface of the backfilled saucer area at the rate of one (1) pound per tree before mulching.

F. Pruning shall be done with sharp tools which make a clean cut. Care shall be taken to preserve the natural appearance of the plant. Pruning shall consist of removal of selected small branches rather than a general cutting back of all branches. The pruning shall be limited to removal of damaged branches and cutting back of longer lateral branches. The central leader shall not be cut under any circumstances.

G. Mulching material as specified shall be applied to all plants over the entire backfilled saucer area to a depth of three (3”) inches. A slight saucer shall be maintained around each plant for watering.

H. All stems and leaves of plant materials shall be uniformly covered with an antidesiccant emulsion, using an approved low pressure power sprayer to apply an adequate film over trunks, branches, twigs and/or foliage. The spray material shall not be applied at temperatures below 32 degrees F and shall be protected from freezing at all times.

I. All plants shall be carefully and thoroughly watered during planting and as often as necessary thereafter to provide the best growing conditions until acceptance of the work.

2.018.8 PLANT SUPPORT AND WRAPPING

All stakes or guying shall be done immediately after planting. Stakes and wire shall be maintained. Plants shall stand plumb after staking.

Plants shall be braced upright in position by guy wires with turnbuckles or stakes according to the following schedule:

Tree Caliper	Tree Support Method
1 inch	1 stake with one tie
1 - 2 inches	2 stakes with two ties
2 - 4 inches	3 guy wires
over 4 inches	4 guy wires

Promptly after planting and inspection, the trunks of all deciduous trees shall be spirally wrapped starting at the base with burlap or approved tree wrap. The wrap shall overlap half the width of the tape and be securely tied around the tree stem at two (2’) foot intervals. The wrapping shall cover the entire surface of the trunk to a height of six (6’) feet or the first main branches.

2.018.9 MAINTENANCE SERVICE

Begin maintenance of plant materials shall begin immediately after planting and continue until termination of warranty period. Maintenance shall include measures necessary to establish and maintain plants in a vigorous and healthy growing condition. Maintenance shall include the following:

A. Cultivating and weeding plant beds and tree pits. Herbicide use shall be minimized. When herbicides are used for weed control, apply in accordance with manufacturer's instructions. Remedy damage resulting from use of herbicides.

B. Watering sufficient to saturate root system.

C. Pruning, including removal of dead or broken branches, and treatment of pruning wounds.

D. Disease and insect control.

E. Maintaining wrappings, guys, turnbuckles, and stakes. Adjustment of turnbuckles to keep guy wires tight. Repair or replacement of accessories when required.

2.019 CAST-IN-PLACE CONCRETE

2.019.1 WORK INCLUDED

Furnishing all labor, materials, equipment and incidentals required for all cast-in-place concrete, including reinforcing steel, forms, water stops and miscellaneous related items such as sleeves, reglets, anchor bolts, inserts and embedded items specified under other Sections.

2.019.2 REFERENCE STANDARDS

All work shall conform to OSHA approved practices.

ACI 301 - Structural Concrete for Buildings

ACI 305 - Recommended Practice for Hot Weather Concreting

ACI 306 - Recommended Practice for Cold Weather Concreting

ACI 315 - Details and Detailing of Concrete Reinforcement

ACI 347 - Recommended Practice for Concrete Formwork

ASTM A185 - Welded Steel Wire Fabric for Concrete Reinforcement

ASTM A615 - Deformed and Plain Billet-Steel Bars for Concrete Reinforcement

ASTM C33 - Concrete Aggregates

ASTM C94 - Ready-Mixed Concrete

ASTM C150 - Portland Cement

2.019.3 SUBMITTALS

Shop Drawings: Submit to the DPW or designated agent four (4) sets of completely detailed working drawings and schedules of all reinforcing required.

2.019.4 QUALITY ASSURANCE

Concrete work shall conform to all requirements of ACI 301 and ACI 347, except as modified herein.

Protection: Concrete reinforcement shall be stored in a manner to prevent excessive rusting and fouling with dirt, grease, and other bond breaking coatings.

2.019.5 SCHEDULING

A. Call Dig Safe (1-888-DIG-SAFE or 1-888-344-7233)

B. Formwork and steel reinforcing installation shall be completed at least 24 hours in advance of placing concrete.

C. The DPW or designated representative shall be notified upon completion of formwork and completion of steel reinforcing installation.

D. The DPW or designated representative shall be notified at least 24 hours in advance of placing concrete.

2.019.6 CEMENT

Cement: ASTM C150, Portland Type I; Type II if concrete will be in contact with wastewater

2.019.7 AGGREGATES

Fine Aggregate: ASTM C33

Coarse Aggregate: ASTM C33, 3/4 inch maximum size

2.019.8 ADMIXTURES

Air Entraining: "Darex AEA" by W.R. Grace, or equal

Water Reducing: "WRDA with Hycol" by W.R. Grace, or equal

All adamixtures shall be utilized in accordance with ACI Standards.

No other admixtures are permitted without prior acceptance by the DPW or designated representative.

2.019.9 CONCRETE

The proportions of ingredients and compressive strength shall be selected in accordance with ACI Standards.

The concrete compressive strength shall be as appropriate per application.

All concrete shall have a slump. The slump shall vary with design and be applied per ACI standards for proposed application.

2.019.10 REINFORCING

The following shall be a minimum:

Reinforcing Steel: ASTM A615, Grade 60 deformed bars; stirrups and ties Grade 40, or other reinforcing steel per ASTM standards.

Welded Wire Fabric: ASTM A185, or other welded wire fabric per ASTM standards

Reinforcing steel shall be fabricated in conformance with ACI 315

2.019.11 FORMS AND ACCESSORIES

The following shall be a minimum:

Lumber: All form lumber shall be in accordance with ACI 347.

Form Ties: Shall be removable metal of fixed length; cone type, one and a quarter (1-1/4) inch maximum diameter; one (1) inch break back dimension; and waterproofing washer. Wire ties and wood spreaders not permitted.

Form Release Agent: Shall be colorless material which will not stain concrete nor absorb moisture nor impair natural bonding or color characteristics of coating intended for use on concrete.

Dovetail Anchor Slots: Shall be galvanized steel; easily removed foam filler; bent tab anchors; securable to concrete formwork.

Waterstop: Shall be Extruded Polyvinyl Chloride or cold joint waterstop (volclay) as shown on the approved plans.

2.019.12 GENERAL EXECUTION

A. Design, and formwork construction, falsework, shoring, and bracing shall meet all loads during placement and curing, so that cast-in-place concrete conforms to required finishes, shapes, lines, and dimensions.

B. Inserts, openings, sleeves, offsets, recesses, anchorage, blocking, and other penetrations and embedments shall be provided for.

C. Embedded Items: Steel frames, angles, bolts, inserts, and other items required to be anchored shall be set in the concrete before the concrete is placed.

D. Form Release Agent: Form release agent shall not be applied where concrete surfaces are scheduled to receive special finishes which may be affected by agent. Contact surfaces of untreated forms shall be soaked with clean water and surfaces kept wet prior to placing concrete. Application of form release agent shall be in accordance with manufacturer's instructions.

2.019.13 REINFORCING

A. Fabrication:

1. Fabrication of all reinforcement shall be in strict accordance with the reviewed and accepted shop drawings.

2. Bars with kinks or bends not shown on the approved plans or on the reviewed and accepted shop drawings shall not be used.

3. Bending or straightening steel in a manner that will damage the material shall not be allowed.

B. Placement: All concrete reinforcement shall be accurately placed, positively secured and supported by concrete bricks, metal chairs or spacers, or by metal hangers.

C. Splicing:

1. Bars shall be placed with minimum thirty (30) bar diameter overlap at splices.

2. Lapped ends of bars may be placed in contact and securely wired or may be separated one and a half (1½") inches minimum to permit the embedment of the entire surface of each bar in concrete.

3. Splices of adjacent bars shall be staggered.

Splice wire fabric at least one and a half (1½) meshes wide.

D. Dowels: All required steel dowels shall be placed and securely anchored into position.

E. Obstructions: If conduits, piping, inserts, sleeves, or any other items interfere with placing reinforcement as indicated on the approved plans or as otherwise required, the Design Engineer shall be immediately consulted for proper placement before placing concrete.

F. Steel reinforcement shall be free from rust scale, loose mill scale, oil, paint, and all other coatings which will destroy or reduce bond between steel and concrete.

2.019.14 INSPECTION

The contractor, developer and/or owner shall:

A. Verify that all formwork, reinforcing and work of other trades are complete and ready for placement of concrete.

B. Notify the DPW or designated representative at least 48 hours before placing concrete. No work can proceed without notifying the DPW or designated representative.

2.019.15 CONCRETE MIXING AND PLACEMENT

A. All cast-in-place concrete shall be transit-mix concrete in accordance with ASTM C94.

B. Retamping of concrete is not permitted.

C. Weather Conditions: Concrete shall not be placed when weather conditions are not suitable for the proper placing, finishing or curing of the concrete. Unless otherwise accepted by the DPW or designated representative, concrete shall only be placed during dry weather. In the event of sudden rainstorms, cover exposed, freshly placed concrete and protect from damage. When cold or hot weather concreting is authorized by the DPW or designated representative, comply with ACI 305 and ACI 306.

D. Cold Weather Concrete: Concrete shall not be placed on the ground where the temperature is below 35 degrees F or in forms where the form, reinforcing steel, adjacent concrete, etc. are below 35 degrees F. Concrete shall be covered and heated immediately after placement and only allowed to be covered to place the finish.

E. When Type II cement is used, elapsed time between initial contact of the cement with water and the completed discharge of the batch at the Project site shall not exceed one and a half (1-1/2) hours or 300 revolutions of the drum, whichever comes first. Reduce

the above limits when conditions result in quick-stiffening of the concrete, or when directed by DPW Director or designated representative.

F. Conveying and Placing Concrete: Concrete shall be conveyed to the forms as rapidly as practicable, utilizing methods which will not cause segregation or loss of ingredients. Free fall from mixer or truck to conveyance shall not exceed three (3') feet. When placing concrete in final position, the free fall shall not exceed five (5') feet. Concrete shall be placed in horizontal layers approximately two (2') feet thick and avoid the formation of cold joints and poorly bonded sections between layers. The horizontal distribution of concrete by spading or vibration is prohibited.

G. Vibration: Unless otherwise specified or directed by the DPW or designated representative, all reinforced concrete shall be subject to vibration. Use only approved mechanical vibrators operated by experienced operators. Vibrators shall be applied at uniformly spaced points not further apart than the visible effectiveness of the machine. Vibration of concrete shall be sufficient to produce satisfactory consolidation without causing segregation. Vibrators shall not be used to transport concrete in the forms or insert them into lower layers of concrete that have begun to set.

2.019.16 CONCRETE TESTING

A. Contractor shall prepare, cure and have tested by an independent laboratory, one (1) set of four (4) test cylinders for each concrete placement in accordance with Chapter 16 of ACI 301.

B. Contractor shall pay for all concrete testing including all supplemental testing required if the cylinders break at lower than the required strength.

C. A minimum of one (1) slump test shall be performed for each batch of concrete and when additional water is added.

2.019.17 CURING

Concrete shall be water cured, or cured using curing compounds or waterproof paper and sheeting, or other acceptable methods. Minimum curing period shall be seven (7) days.

2.019.18 REMOVAL OF FORMS

A. Forms shall be removed in accordance with ACI 347 only after concrete has attained sufficient strength to support its own weight, construction live loads placed thereon, and lateral loads, all without excessive deflection or damage to the structure.

B. Contractor shall be fully responsible for the proper removal of forms, installing all shoring and reshoring, and removal of shores and reshores. The Contractor shall, at no additional cost to Owner, replace any work damaged due to improper or early removal of forms, shores and reshores.

C. Metal spreader ties shall be removed on exposed concrete by removing or snapping off inside the wall surface and pointing up and rubbing the resulting pockets to match the surrounding areas.

2.019.19 FINISHING CONCRETE

Finishes shall be provided in accordance with ACI 301 as follows:

A. Rough Form Finish: Concrete surfaces below grade and other surfaces not exposed to view after construction, shall have fins and rough edges removed. All tie holes and defects shall be patched. All channels and other surfaces used to convey liquids shall be provided with a smooth form finish, whether or not it may be exposed to view.

B. Grout Cleaned Finish: Cement grout composed of one (1) part cement to two (2) parts fine sand, mixed with water to the consistency of heavy cream shall be thoroughly wet and brushed on. Cement shall be light colored to produce a finish matching the color of the concrete. Grout shall be thoroughly rubbed over the entire area with clean burlap or a sponge rubber float to fill pits and voids completely. While the grout is still plastic, surfaces shall be rubbed with a dry mix of the grout until no materials remain on the surface, except within pits and voids. The grouting operation for an area shall be completed the day it is started.

C. Surfaces to Receive Epoxy Coatings: Oil and grease, and any curing compounds and other materials which are incompatible with or may adversely affect the bonding of the epoxy coatings shall be removed. Concrete surfaces as specified for smooth form finish shall be prepared.

D. Floated Finish: Concrete floor slabs.

2.019.20 PROTECTION

A. Concrete shall be protected from damage due to sun, rain, flowing water, frost, weather and mechanical injury.

B. Concrete temperature shall be maintained at a minimum of 50 degrees F for not less than three (3) days and do not expose concrete to a temperature below 40 degrees F for a minimum of seven (7) days after placement.

C. Concrete walls shall not be subject to lateral pressures until the supporting members are placed and cured for a minimum of fourteen (14) days with the concrete attaining a minimum of seventy-five (75%) percent of the required twenty-eight (28) day compressive strength. Contractor shall be responsible for damage to, or misalignment of, walls resulting from earth backfilling, trapped water or other causes.

2.020 PRECAST CONCRETE CATCH BASINS

2.020.1 WORK INCLUDED

A. Furnishing precast concrete catch basins and appurtenant materials.

B. Installation.

2.020.2 REFERENCE STANDARDS

ASTM C478 - Precast Reinforced Concrete Manhole Sections.

AASHTO - Standard Specifications for Highway Bridges.

New Hampshire Standard Specifications for Road and Bridge Construction.

2.020.3 MATERIALS AND DESIGN

A. Precast Concrete Catch Basins: ASTM C478 or ASTM C 858, precast reinforced concrete, of depth indicated as shown on the approved plans. Sections shall have provision for rubber gasket joints. Base section slab shall have a minimum thickness of six (6”) inches, riser sections shall have minimum thickness of four (4”) inches and be forty eight (48”) inches inside diameter, and top section and grade rings shall match twenty four (24”) inch frame and grate, unless otherwise approved by DPW Director or designate representative.

    1. Base Section: Base riser section with integral floor

    2. Riser Section: Sections shall be of lengths to provide depth indicated.

    3. Top Section: Flat slab type with openings to match grade rings.

    4. Grade Rings: Provide two (2) or three (3) reinforced concrete rings, of six (6”) to (9”) inches total thickness.

    5. Gaskets: ASTM C 443, rubber.

    6. Pipe Connectors: ASTM C 923, resilient, of size required, for each pipe connecting to base section.

    7. Channel and Bench: Concrete

B. Precast Concrete Catch Basins shall:

    1. Be constructed of minimum 5,000 psi reinforced concrete using Type II cement.

    2. Shall be capable of withstanding H-20 wheel loadings.

    3. Be cured five (5) days before shipping.

    4. Have a minimum of two (2’) foot deep sump or as approved per application.

2.020.4 INSTALLATION

A. Installation shall be performed in accordance with approved plans.

B. Backfilling and compaction shall be performed in accordance with approved plans.

C. The base on which the precast concrete catch basin is set shall be dry, firm and level.

D. Catch basin sections shall be set vertical with sections in true alignment within a three (3”) inch maximum tolerance.

E. Holes in the concrete sections and around pipe entrances shall be plugged with a non-shrinking grout.

F. Inlet frames shall be brought to grade using brick type SS, grade N and mortar.

2.021 CASTINGS

2.021.1 WORK INCLUDED

A. Furnishing catch basin frames and grates, drain and miscellaneous manhole frames and covers.

B. Installation.

2.021.2 REFERENCE STANDARDS

ASTM A48 - Grey Iron Castings.

2.021.3 QUALITY CONTROL INSPECTION

All castings shall be subject to a hammer inspection by the DPW or designated representative. Castings rejected upon delivery to the site shall be marked as such and removed from the site. All castings damaged after delivery or after installation shall be removed and replaced as directed by the DPW or designated representative.

2.021.4 ACCEPTABLE MANUFACTURERS

Manhole Frames and Covers: Neenah Foundry Co., Catalog No. R-1743.

Waterproof Manhole Frames and Covers: Neenah Foundry Co., Catalog No. R-1916.

Catch Basin Frames and Grates: E.L. LeBaron Foundry Co., Neenah Foundry Co., Catalog R-3570, or approved equal.

In areas with roadway slopes of 6% or greater, the catch basin frames and grates shall be Neenah Foundry Co., Type R-3210L or approved equal

Substitutions: Products of equal or better quality, detail, function, and performance may be proposed for substitution.

2.021.5 GENERAL PRODUCTS

The castings shall be of good quality, even-grained cast iron, free from scale and defects of any nature which would render them unfit for the service for which they are intended. Contact surfaces of covers and frame seats shall be machined at the foundry, before shipment to prevent rocking of covers in any orientation.

All castings shall be thoroughly cleaned and subject to a careful hammer inspection.

Castings shall be Class 30 minimum, conforming to the ASTM A48.

Before being shipped from the foundry, castings shall be sandblasted.

All castings shall be heavy duty suitable for H-20 loadings.

All manhole covers for installation on drain manholes shall have the word "DRAIN" cast into a diamond design on the top surface.

2.021.6 MANHOLE FRAMES AND COVERS

Manhole frames and covers shall provide thirty (30”) inch diameter clear opening.

2.021.7 POLYLINERS

Polyethylene Liners:

A. Materials shall conform to the requirements of ASTM M 294, Section 6, but not have a wall thickness less than a quarter (¼”) inch.

B. Liners shall be fabricated at the shop. Downspout shall be extrusion fillet welded to the polyethylene sheet.

C. Installers shall place a continuous bead of an approved silicone sealant between the frame and polyethylene sheet.

D. Liners shall only be used on drainage structures with a minimum of four (4’) feet diameter.

E. The polyethylene sheet shall be trimmed to a maximum of the outside flange on the frame for the catch basin before placing concrete (except when used with curb).

F. The center of the grate and frame must be centered over the center of the downspout.

2.021.8 CATCH BASIN FRAMES AND GRATES

Catch basin frames and grates shall have twenty-four (24”) inch-square grates with two (2”) inch square openings suitable for H-20 loadings.

In non-residential green areas, the contractor, developer and/or owner may propose the use of type "C" inlet catch basins subject to the approval of the DPW Director or designated agent.

2.021.9 SETTING FRAMES, COVERS AND GRATES

A. Frames shall be set with the tops conforming accurately to the grade of the pavement or finished ground surface or as indicated on the approved plans. Frames shall be adjusted to grade with a precast concrete grade ring or a maximum of three (3) courses of mortared red, type SS, sewer brick. Exterior of sewer brick shall be plastered with mortar. Frames shall be set concentric with the top of the masonry and in a full bed of mortar so that the space between the top of the manhole masonry and the bottom flange of the frame shall be completely filled and made watertight. A thick ring of mortar extending to the outer edge of the masonry shall be placed all around and on the top of the bottom flange. The mortar shall be smoothly finished and have a slight slope to shed water away from the frame.

B. Manhole covers and grates shall be left in place in the frame, upon completion of other work at the manholes or catch basins.

APPENDIX I: ADMINISTRATIVE DOCUMENTS

A. Application for Start of Construction
B. Subdivision/Site Plan Improvements Guarantee Worksheet
C. DPW Construction Monitoring Approach
D. Application/Permit for Street Opening
E. Stormwater Permit and Checklist
F. Driveway Permit Application
G. Inspection Fee Agreement Form
H. Release of Inspection Fee
I. Cash Escrow Agreement Form
J. Bond/Letter of Credit Agreement Form
K. Release of Security or Escrow Form

TOWN OF MILFORD

APPLICATION FOR START OF CONSTRUCTION

Approved Name(s) of Road(s) or Drive(s)

Subdivision Name: _____

Location: _____

Developer: _____

Contracted Road Contractor: _____

Subcontractors: _____

Date of Application: _____

Developer's Authorized Agent: _____

Public Works Department's Authorized Agent: _____

Fire Department's Authorized Agent: _____

Surety Amounts:

Public Works Dept. **$**_____

Surety Received (signatures required):

_____
Director of Public Works

Escrow Accounts Established (signatures required):

_____
Director of Public Works

_____ _____
Initial Amount in Escrow **Date**

_____ _____
Estimate Amount **Date**

Submit completed, authorized, form to the Director of Public Works. Do not proceed with construction without a Notice to Proceed.

TOWN OF MILFORD, NEW HAMPSHIRE

SUBDIVISION/SITE PLAN IMPROVEMENTS GUARANTEE WORKSHEET

I hereby certify that, in addition to any work already completed, the following itemized statement and estimated unit costs will complete all improvements required by the Milford Subdivision/Site Plan Regulations for the following lot(s):

Map _____ Lot _____ Name of Project: _____

Date: _____

ITEM	QUANTITY	MEASURE	UNIT PRICE	PRICE
1. Site Work				
a. Clearing and Grubbing		Acre	$7,500.00	$0.00
b. Excavation		CY	$4.00	$0.00
c. Grading		SY	$0.20	$0.00
d. Erosion Control		LF	$2.50	$0.00
e. Other: Construction Entrance		LS	$1,000.00	$0.00
f. Ledge Excavation - assume 10% of Item 1b		CY	$25.00	$0.00
2. Roadway Construction				
a. Bank Run Gravel		CY	$8.00	$0.00
b. Crushed Gravel		CY	$16.00	$0.00
c. Crushed Stone		CY	$15.00	$0.00
d. 2½" Paving, Binder Course		EA	$65.00	$0.00
e. 1½" Paving, Finish Course		EA	$65.00	$0.00
f. Vertical Granite Curbing		LF	$17.50	$0.00
g. Striping		LF	$1.00	$0.00
h. Prep Work		LF	$1.00	$0.00
i. Tack Coat		SY	$1.25	$0.00
j. Filter Fabric		SY	$2.00	$0.00
k. Other: Sand		CY	$3.00	$0.00
l. Retaining Wall		CY	$5.00	$0.00
m. Trench Patch		TON	$150.00	$0.00
		PAGE SUBTOTAL		**$0.00**

ITEM	QUANTITY	MEASURE	UNIT PRICE	PRICE
3. Drainage Work				
a. Pipe: Size Type				
36"		LF	$50.00	$0.00
18"		LF	$25.00	$0.00
15"		LF	$20.00	$0.00
12"		LF	$18.00	$0.00
6" Underdrain		LF	$15.00	$0.00
b. Catch Basins/Inlets		EA	$1,750.00	$0.00
c. Driveway Culverts		EA	$1,000.00	$0.00
d. Retention/Detention Basins				
Excavation		CY	$10.00	$0.00
Loam and Seed		SY	$4.00	$0.00
Inlet/Outlet		EA	$3,500.00	$0.00
e. End Section		EA	$500.00	$0.00
f. Wingwall/Headwall		LF	$250.00	$0.00
g. Swales				
Excavation		LF	$4.00	$0.00
Loam and Seed		SY	$4.00	$0.00
h. Rip Rap/Filter Material		CY	$25.00	$0.00
i. Other:				
4. Misc. Utilities				
a. Gas Mains		LF	$20.00	$0.00
b. Gas Services		EA	$500.00	$0.00
c. Buried Utilities		LF	$20.00	$0.00
5. Misc. Improvements				
a. Street Signs		EA		$0.00
b. Stop Signs		EA		$0.00
c. Guardrail		LF	$17.50	$0.00
d. Guardrail Terminus End Units		EA	$1,200.00	$0.00
e. Paved Sidewalks		LF	$20.00	$0.00
f. Parking Space Bumpers		EA	$250.00	$0.00
g. Landscaping				
Loam and Seed		SY	$4.00	$0.00
Trees		Per		$0.00
Shrubs		EA		$0.00
h. Fire Cisterns		Gallon	$2.50	$0.00
6. Misc. Items				
a. ROW Bounds		EA	$175.00	$0.00
b. Property Bounds		EA	$125.00	$0.00
c. As-Built Drawings		Sheet	$750.00	$0.00
d. ROW Deeds		LS	$1,000.00	$0.00
e. Construction Monitoring		Est.		$0.00
		PAGE SUBTOTAL		**$0.00**

		TOTAL (2 PAGES)	**$0.00**
7. Contingencies	(15% of Subtotal)		$0.00
		Total	**$0.00**

Estimated by: _____

Concurrence by Applicant/Developer

Signature: _____
Title: _____
Date: _____
Tele #: _____

Signature: _____
Title: _____
Date: _____
Tele #: _____

Date Improvements to be Completed By: _____

Approved by:

_____
Director of Public Works

_____
Date

DEPARTMENT OF PUBLIC WORKS
MILFORD, NH

CONSTRUCTION MONITORING APPROACH

SUBDIVISIONS/OFF-SITE IMPROVEMENTS/UTILITY CONSTRUCTION

CONSTRUCTION MONITORING

I. Stop by
II. Milestone inspection
III. Part-time inspection
IV. Full-time inspection
V. Testing
VI. Expenses
VII. Labor Costs

I. Stop by:

- Erosion control check
- Roadway layout
- Catch basin frame adjustments
- Restoration of growth
- Guardrail
- Clearing and grubbing
- Fire cisterns
- Curb/berm
- Shoulder work

II. Milestone Inspections:

- Erosion Control
- Clearing & Grubbing
- Subgrade
- Gravel grade
- Crushed gravel grade
- Binder Paving
- Substantial Completion
- Finish Paving
- Final Completion

III Part-Time Inspection:

- Box culverts/Wingwalls
- Retaining walls
- Embankment filling

IV. Full-Time Inspection:

- Paving
- Miscellaneous buried utility[1] installation work and backfilling
- Drainage piping and catch basins[1]
- Buried utilities

[1] *Full-time initially, and if work proceeds acceptably, the level of construction monitoring can be reduced, as determined by the Town's engineer.*

V. Testing

- Soils Compaction and Lab Proctor Tests
- Subconsultant charges are marked up 10% for overhead and profit.
- Concrete Testing (i.e., Field Sampling and Cylinder Compressive Strength Tests)

VI. Expenses

- Auto mileage - $.50/mile (or 10% above amount allowed by IRS)
- Auto mileage from Consultant office to project and return, plus incidental mileage
- Misc. materials (fluorescent paint, grade stakes), billed at cost

VI. Labor Rates

- As determined by DPW Director

CONSTRUCTION ADMINISTRATION:

Averages approximately 25% of the value of the work above.

- Problem solving
- Addressing Town Officials' concerns
- Conflict resolution
- Field report review and distribution
- Assessment of design changes
- Meetings
- Correspondence
- Field personnel coordination
- Bond reductions
- Preconstruction meeting
- Miscellaneous
- Construction monitoring estimates
- Bond estimates
- Final Acceptance inspection

- Mileage

DEPARTMENT OF PUBLIC WORKS TOWN OF MILFORD, NEW HAMPSHIRE

APPLICATION FOR STREET OPENING PERMIT

"DIG SAFE CALL CENTER" DATE:_____
1-800-344-7233

DIG SAFE APPROVAL #:_____ TOWN OF MILFORD PERMIT #:_____

NAME & ADDRESS: _____

LOCATION OF OPENING:_____

PURPOSE OF OPENING:_____

SIZE OF OPENING:_____ REQUESTED DATE OF OPENING:_____ ESTIMATED CLOSING DATE:_____

NOTES: When excavation and trenches have been improperly backfilled and settlement occurs it will be re-opened to the depth required by the Town, refilled and compacted with suitable material and the surface will be restored to the required grade and condition.

Appropriate cosntrution signs wil be placed as designated by the Department of Public Works at _____ Intervals before and after the project.

Is this street to be closed (please circle): YES / NO Day:_____ Night:_____

Ample notification should be given, preferably by Media:_____

Police, Fire and Ambulance are to be notified.

Received approved drawings from Contractors (please circle): YES / NO

Department of Public Works office must be notified 48 hours before construction commences by the Contractor. Telephone No. (603) 673-1622

ADDITIONAL REQUIREMENTS: All work shall conform to Town of Milford's most current: Infrastructure Design, Construction & Administration Standards, Stormwater Management and Erosion Control Ordinance, Water Department Rules & Regulations and Sewer Use Ordinance.

FOREMAN APPROVAL _____ DIRECTOR APPROVAL _____

DISAPPROVED _____

NOTIFICATION OF PENDING WORK:
MACC BASE _____ POLICE DEPT _____ WATER UTILITIES _____

GENERAL PERMIT REQUIREMENTS

Maximum length of trench to open at one time shall not be more than _____ feet and no more than _____ feet left open at night. Suitable unrestricted egress to properties abutting the roadway shall be maintained at all times. Two-way traffic (nights, weekends and holidays) shall be maintained at all times. Any pavement damage or open trench in paved section (traveled way) must be backfilled and temporarily patched with hot top or cold patch the same day, unless otherwise specified by the permit.

Traffic must be maintained during the performance of the work. The work shall be protected by: suitable barricades, standard and advance warning signs, flags during the day and proper lighting at night. Uniformed special traffic officers or other certified traffic control personnel shall be provided whenever the Town deems them necessary for the protection of the public. All signs shall be kept in good repair at all times.

During the weekends and on workdays during the hours the job is inactive, a standby crew shall be availale in case they are needed for the protection and maintenance of traffic. One or more telephone numbers which will reach the standby crew, shall be furnished to the following people: Miflord Police Chief and Director or General Foreman of Public Works.

Signs, each four feet by six feet, three at each end of the active work area, shall properly advise approaching traffic of name of contactor responsible for the work and the nature of work being preformed. Sign package shall conform to the latest standards set forth by NH DOT.

Any future surface distortion along the trench lines, due to settlement or other causes attributable to the construction, shall be corrected as required during the period of one year following the acceptance of the project by the Owners.

All work shall be in strict accordance with the Town of Milford Department of Public Works Infrastructure Design, Construction & Administration Standards and the latest version of NH DOT Standards Specifications for Road and Bridge Construction.

Re-paint all striping within the limits of the overlay. Match existing striping location at overlay limits. All striping layouts shall be approved by the Engineer prior to performing the work. Provide temporary markings (reflectorized plastic markings, RPM's) as directed by the Director of Public Works if striping can not be performed immediately after overlay work is completed.

CONTRACTOR REQUIREMENTS

I/We, the contractor agree to save harmless the Town of Milford, New Hampshire from any and all claims arising from the construction of the work or from trench settlement or other deficiencies of the construction for a period of one year following the acceptance of the project by the Owners.

I/We, the contractor agree to assume such additional costs the Town may incur by reason of failure to perform this work in the manner prescribed above and in accordance with said plans and specifications, and are familiar with thie penalty imposed by Chapter 249, RSA 1955, and amendments thereto.

I/We, the contractor agree to furnish a continuing Surety Bond in the amount of _____ dollars guaranteeing the fulfillment of the provisions, instructions and regulations prescribed above, and later instructions issued by the Director of Public Works during the performance of the work, and satisfactory maintenance of the disturbed areas for a period of one (1) year following the acceptance of the project by the Town of Milford.

I/We, the contractor agree to reimburse the Town of Milford fully for the services of a Town Inspector(s) when assigned to this project to insure compliance with the terms of this permit.

I/We, the contractor, and we, the owner agree to the following:

Due to weather conditions, (snow, sleet, freezing rain, rain, fog, or any other act of God) this permit will be void subject to a review of the area by the Director of Public Works. Permission to continue construction may be allowed on a day to day basis after said review, but subject to instructions from the Director of Public Works or his representative.

Contractor: _____ Signature:_____

Address: _____ Title: _____

Town/State/Zip: _____

Phone: _____

OWNER REQUIREMENTS

I/We, the Owners agree to save harmless the Town of Milford, New Hampshire from any and all claims arising form the construction, maintenance and operation of said _____ and its appurtenances and agree to obtain permits from the Director of Public Works before performing any future excavation for the maintenance or renewal of the said _____ or other appurtenances thereto within the limits of the right-of-way.

I/We, the Owners, agree to assume such additional costs as the Town may incur due to maintenance, operation, renewal or extension of said _____ or other appurtenances thereto with the right-of-way limits.

It is understood and agreed that this permit is for the right of construction, occupancy , operation and further maintenance of the said _____ and is by sufferance only, with the Town reserving the right to require, in the event of future alterations, relocation or complete removal of said _____ and we, the owners agree to perform such work promptly and at our own expense.

Owner:_____ Signature:_____

Address:_____ Title:_____

Town/State/Zip:_____

Phone:_____

STORMWATER MANAGEMENT APPLICATON

Office of Community Development
Town Hall – One Union Sq
Milford, New Hampshire
(603) 673-7964
www.Milford.nh.gov

SITE INFORMATION:
Location: _____

Between: _____ and _____ Zone: _____
Cross street Cross street

Owner Name: _____ Owner Address: _____

Parcel # _____

APPLICANT:
Name: _____ Address: _____

Contact: _____ Daytime Phone #: _____

SCOPE OF WORK:
Residential: _____ Project description: _____

Commercial: _____ Project description: _____

Building permit
Total site disturbance: _____

Wetland or buffer encroachment: ___ Impact amount: _____
Planning Board approved project: ___ Site Plan or SD plan name and # _____

Owner signature: _____ Date: _____

Applicant signature: _____ Date: _____

Checklist for STORMWATER PERMIT APPLICATIONS

This Checklist is to be used as a guide for complying with the ***Town of Milford Stormwater Management and Erosion Control Regulations***. A completed Checklist must be submitted as part of the required stormwater application. The Planning Board or Code Enforcement Officer shall make a determination to accept, reject, or table an application based on both its review and the review and recommendation of the Community Development Department.

Please fill out this Checklist thoroughly by checking the appropriate box and providing the necessary information. Provide written justification for any waiver requests (including citing the appropriate section number of the regulations), or for any boxes checked "not applicable" if the reasons are not apparent. A Waiver Request form is available through the Town of Milford website (http://planning.milfordnh.info/planning_2.htm#Forms) or through the Milford Community Development Office.

The ***Milford Stormwater Management and Erosion Control Regulations*** are available for a fee at the Milford Community Development Office or on the Web at: www.milford.nh.gov. If you have any questions, please contact this Office for assistance, at (603) 673-7964. **General construction standards** for storm drainage, roadways, water, and sanitary sewer are available for a fee at the Department of Public Works or Water Utilities Department.

NOTE: If greater than 43,560 square feet of disturbance is proposed for any use, the applicant IS REQUIRED to check Federal EPA NPDES permitting requirements.

Name of Stormwater Application _____ **Map(s)** _____**Lot(s)** _____

TYPE OF PROJECT (The project involves):

☐	**Disturbance or impact less than 5,000 square feet** ** No Permit Required at this time. No further action required. **

☐	**Disturbance or impact greater than 5,000 square feet and less than 20,000 square feet**
	Review the conditions below. If any of the five boxes below are checked, you are not currently required to apply for a permit.
☐	Normal Maintenance of Land in Agricultural Use utilizing BMP's
☐	Maintenance of property associated with a single-family dwelling
☐	Construction of a fence that will not alter drainage patterns
☐	Construction of utilities within an exisitng paved roadway that will not permanently alter drainage patterns
☐	Emergency repairs to any stormwater management facility per listed conditions

If the project proposes a disturbance greater than 5,000 square feet, and at least one of the five boxes above are not checked, a Permit Application is required. Continue this checklist.

☐	**Disturbance of impact greater than 20,000 square feet**
☐	**Impact is not solely related to construction or reconstruction of a roadway** (If solely related to Roadway reconstruction, no application is required unless greater than 43,560 square feet of disturbance is required.)
☐	**Subdivision or phasing of more than three lots**
☐	**Proposed work in or adjacent to a wetlands or wetlands buffer**
☐	**Construction of utilities requiring contiguous ground disturbance greater than 20,000 square feet**
☐	**The utility work is completely contained within the limits of an existing paved roadway** (A Permit is required, however, no Plan is required)
☐	**Disturbance or impact greater than 43,560 square feet and is only related to construction or reconstruction of a roadway**
☐	**Proposed work in or adjacent to disturbed critical areas**

If any of the above boxes are checked, a Permit Application and Stormwater Management and Erosion Control Plan **ARE** required.

INITIAL (AND FINAL) APPLICATION REQUIREMENTS (5.32.090.A)

	ON PLAN	NOT APPLICABLE	WAIVER REQUESTED	EXPLANATION
1. Drawings Shall Include:				
a. Locus Map showing property boundaries	☐	☐	☐	
b. North arrow, scale and date	☐	☐	☐	
c. Property lines	☐	☐	☐	
d. Easements	☐	☐	☐	
e. Structures, utilities, roads and other paved areas	☐	☐	☐	
f. Topographic contours	☐	☐	☐	
g. Critical Areas	☐	☐	☐	
h. Drainage Features	☐	☐	☐	
i. Surface water	☐	☐	☐	
ii. Wetlands	☐	☐	☐	
iii. Drainage patterns	☐	☐	☐	
iv. Watershed boundaries	☐	☐	☐	
i. Vegetation	☐	☐	☐	
j. Limits of work	☐	☐	☐	
2. NCSS/SSSNNE Soils information related to highly erodible soils	☐	☐	☐	
3. Construction details & application procedures for temporary and permanent stormwater management and erosion and sediment control BMP's	☐	☐	☐	
4. Areas and timing of soil disturbance	☐	☐	☐	

	ON PLAN	NOT APPLICABLE	WAIVER REQUESTED	EXPLANATION
5. A schedule for self-inspection and maintenance of all BMP's	☐	☐	☐	
6. Narrative section including discussion of each measure, its purpose, construction sequence, and installation timing as they apply to the site	☐	☐	☐	
7. If no Infiltration or Exfiltration is proposed skip to question 9	☐	☐	☐	
a. Test pit information	☐	☐	☐	
b. Estimated seasonal high water table elevations	☐	☐	☐	
8. Calculations for the infiltration or exfiltration system	☐	☐	☐	
9. Any requested studies	☐	☐	☐	
10. Name, address, stamp, and signature of	☐	☐	☐	
-Licensed Surveyor	☐	☐	☐	
-Licensed Civil Engineer	☐	☐	☐	
-Licensed Soil Scientist	☐	☐	☐	
-Licensed Wetland Scientist	☐	☐	☐	

ADDITIONAL FINAL APPLICATION REQUIREMENTS (5.32.090.B)

(If initial application, skip to question 13)

	ON PLAN	NOT APPLICABLE	WAIVER REQUESTED	EXPLANATION
11. Construction Drawings/Supporting Documents:				
a. A project narrative	☐	☐	☐	
b. Plan for stump and debris removal	☐	☐	☐	
c. Topographic contours at two-foot (2') intervals	☐	☐	☐	
d. Surface waters, wetlands, and drainage patterns and watershed boundaries within the project area and within 200 feet of project boundary	☐	☐	☐	
e. Extent of 100-year floodplain boundaries if published or determined	☐	☐	☐	
f. Easements	☐	☐	☐	
g. Areas of cut and fill	☐	☐	☐	
h. Locations of earth stockpiles	☐	☐	☐	
i. Locations of equipment storage and staging	☐	☐	☐	
j. Locations of proposed construction and/or permanent vehicle or equipment fueling	☐	☐	☐	
k. Stump disposal plan	☐	☐	☐	
l. Highlighted areas of poorly and very poorly drained soils	☐	☐	☐	

	ON PLAN	NOT APPLICABLE	WAIVER REQUESTED	EXPLANATION
m. Highlighted areas of poorly and/or very poorly drained soils proposed to be filled	☐	☐	☐	
n. Construction and earth movement schedule	☐	☐	☐	
o. Locations, descriptions, details, and design criteria and calculations for all sedimentation control measures and BMP's	☐	☐	☐	
p. Identification of all permanent control measures	☐	☐	☐	
q. Identification of permanent snow storage areas	☐	☐	☐	
r. Identification of snow management measures during construction	☐	☐	☐	
s. Description of the combination of sediment and erosion control measures which are required to achieve maximum pollutant removal	☐	☐	☐	
12. SWMP Contents must also include:				
a. Design calculations for all BMP measures	☐	☐	☐	
b. A proposed schedule for the inspection and maintenance of all BMP's	☐	☐	☐	

	ON PLAN	NOT APPLICABLE	WAIVER REQUESTED	EXPLANATION
c. Identification of all permanent control measures and responsibility for continued maintenance	☐	☐	☐	
d. Drainage report with calculations	☐	☐	☐	
e. Plans showing the entire drainage area affecting or being affected by the development of the site. Proposed lot boundaries and drainage areas shall be clearly shown on the plan	☐	☐	☐	
f. The direction of flow of runoff	☐	☐	☐	
g. The location, elevation, and size of all existing and proposed drainage features	☐	☐	☐	
h. When detention structures are planned to reduce future condition peak discharge, the soil cover complex method shall be used to compute the runoff volume and peak discharge for designing the structure	☐	☐	☐	
i. Copies of pertinent State and Federal Permits	☐	☐	☐	

13. OUTSIDE AGENCY REVIEW, PERMITTING AND APPROVALS

Depending on the jurisdiction of outside agency authority, and prior to the acceptance of the Stormwater Application by the Planning Board, the applicant may be required to obtain approvals and permits for various aspects of the development from:

	REQUIRED	COMMENTS
A. Milford Zoning Board of Adjustment	☐	_____
B. Milford Conservation Commission	☐	_____
C. Milford Water and Sewer Commissioners	☐	_____
D. Milford Heritage Commission	☐	_____
E. NH Department of Environmental Services (DES)		
1. State subdivision approval	☐	_____
2. Site specific	☐	_____
3. Utility extensions	☐	_____
4. Wetlands dredge and fill	☐	_____
F. NH Department of Transportation (NHDOT)	☐	_____
G. US Army Corps of Engineers	☐	_____
H. "Regional Impact" review	☐	_____
I. Other agencies as required (please list)	☐	_____

Note:
Depending upon the type of review and permit, the Planning Board may require that the permit be obtained prior to final approval or as a condition of approval to be met prior to the signing of the final Subdivision or Site plan but not requiring a final meeting with the Planning Board.

Signature of person preparing the Stormwater Application Checklist:

The Town has the right to deny a permit if any information is missing and that by signing; the applicant is stating the information is accurate to the best of their knowledge.

Name / Title _____ **Date** _____

TOWN OF MILFORD
DEPARTMENT OF PUBLIC WORKS
283 South St, Milford 03055
(603) 673-1662

DRIVEWAY PERMIT / APPLICATION

Please print legibly or type all information

MAP & LOT/PARCEL: _____ DATE SUBMITTED: ____/____/____

PROPERTY LOCATION: _____

OWNER: _____ ADDRESS: _____

OWNER/APPLICANT SIGNATURE: _____ PHONE: _____

CONTRACTOR INFORMATION

COMPANY:_____ PHONE: _____

ADDRESS:_____ FAX: _____

SIGNATURE_____ EMAIL: _____

CONSTRUCTION INFORMATION

SPECIFICATIONS:
New curb cut ___ Additional curb cut ___ Alteration / relocation of existing driveway ___

Driveway width at street: _____ (in feet) Driveway slope: _____ (%)

PLAN SUMBITTALS:
Parcels serviced by on-site septic systems shall submit:
A State Approved septic plan indicating the location of the proposed driveway

Parcels serviced by municipal utilities shall submit:
A plot plan or grading/profile plan, detailing the slope and location of the proposed driveway

SCENIC ROAD HEARING date (if applicable): ___/___/___

COST: _____ PAYMENT INFORMATION: _____ DATE: _____

Department of Public Works approval shall be required prior to driveway construction.

For office use only

Original to DPW ___/___/___ Date approved: ___/___/___ Copy to Building Dept___/___/___

Culvert required: Y / N Size: _____ Easement required: Y / N Bond required: Y / N

ADDITIONAL COMMENTS

Approved by: _____ Date: _____ Permit # _____
William Ruoff, Director of Public Works

All applications and plans may be submitted by fax, email or in person to the Building Dept located in the Community Development Office at the Town Hall, One Union Sq

INSPECTION FEE AGREEMENT FORM
For Inspection Fees, Monitoring and Improvements

Tax Map _____ Lot(s) _____ Date ____ / ____ / _____

As deposit for the project described as _____

_____,

outlined and detailed on the attached Improvements Guarantee Worksheet or Monitoring Estimate, _____ (owner/applicant/developer) has provided to the Town of Milford the sum of $ _____ cash. These funds shall be deposited in an Inspection Fee account of the Town's choosing and shall require the approval of the Director of Public Works for withdrawal. The undersigned hereby agree and covenant that the Town of Milford shall be empowered and shall have the right to withdraw said funds or any part thereof from the aforementioned account, in order that the Town may pay for construction monitoring and/or inspection fees incurred by the owner/applicant/developer as stated above.

Any funds unused in the escrow account shall be returned to the depositor upon submittal and approval by DPW of a Request for Release of Inspection Fee form to process refund of balance.

_____ By: _____

Witness Its: _____

Date: _____

Owner/Applicant/Developer Tax Identification Number: _____

cc: Finance Department
1/14/2010

REQUEST FOR RELEASE OF INSPECTION FEES

Tax Map _____ Lot(s) _____ Date ____ / ____ / _____

The following items, as listed in the Improvements Guarantee Worksheet, have been completed in accordance with Town standards and the total inspection fee amount as shown below is being requested for release (attach additional sheets if necessary):

ITEM AMOUNT FROM WORKSHEET

1. _____ $_____

2. _____ $_____

3. _____ $_____

4. _____ $_____

5. _____ $_____

6. _____ $_____

7. _____ $_____

8. _____ $_____

9. _____ $_____

10. _____ $_____

Total Amount Requested to be Released: $ _____

Signature of applicant/developer: _____

Date: _____

For Departmental Use:

Public Works Director Approval: _____

Cash Escrow Account # _____

Previous Authorizations for Release _____, _____, _____

Date of Director of Public Works approval on above Request: _____

Amount remaining in Security after above Approval: _____

CASH ESCROW AGREEMENT FORM
For Subdivision/Site Plan Improvements, Maintenance and Performance Guarantees, Monitoring and Improvements

Tax Map _____ Lot(s) _____ Date ____ / ____ / _____

As SECURITY for the project described as _____

_____

_____,

outlined and detailed on the attached Improvements Guarantee Worksheet, _____

_____ (owner/applicant/developer) has provided to the Town of Milford the sum of $ _____ cash escrow. These funds shall be deposited in an insured bank account of the Town's choosing and shall require the approval of the Town of Milford Board of Selectmen and the signature of the Treasurer of the Town of Milford for withdrawal. The undersigned hereby agree and covenant that if, for any reason, they fail to carry out the promises and obligations as detailed by midnight on _____, the Town of Milford shall be empowered and shall have the right to withdraw said funds or any part thereof from the aforementioned account, in order that the Town may complete the obligations of the owner/applicant/developer as stated above.

_____ By: _____

Witness Its: _____

Date: _____

Owner/Applicant/Developer Tax Identification Number: _____

Cc: Finance Department

1/14/2010

BOND/LETTER OF CREDIT AGREEMENT FORM
For Subdivision/Site Plan Improvements, Maintenance and Performance Guarantees, Monitoring and Improvements

Tax Map _____ Lot(s) _____ Date ____ / ____ / _____

As SECURITY for the project described as _____

_____

_____,

outlined and detailed on the attached Improvements Guarantee Worksheet, _____

_____ (owner/applicant/developer) has provided to the Town of Milford the sum of $ _____ as a bond/letter of credit named #_____. These funds shall be held by the Town of Milford and shall require the approval of the Town of Milford Board of Selectmen for reduction or release of the security. The undersigned hereby agree and covenant that if, for any reason, they fail to carry out the promises and obligations as detailed by midnight on _____, the Town of Milford shall be empowered and shall have the right to withdraw said funds or any part thereof from the aforementioned account, in order that the Town may complete the obligations of the owner/applicant/developer as stated above.

_____ By: _____

Witness Its: _____

Date: _____

Owner/Applicant/Developer Tax Identification Number: _____

Cc: Finance Department

1/14/2010

REQUEST FOR RELEASE OF SECURITY OR ESCROW

Tax Map _____ Lot(s) _____ Date ____ / ____ / _____

The following items, as listed in the Improvements Guarantee Worksheet, have been completed in accordance with Town standards and the total security or escrow amount as shown below is being requested for release (attach additional sheets if necessary):

ITEM AMOUNT FROM WORKSHEET

1. _____ $_____

2. _____ $_____

3. _____ $_____

4. _____ $_____

5. _____ $_____

6. _____ $_____

7. _____ $_____

8. _____ $_____

9. _____ $_____

10. _____ $_____

Total Amount Requested to be Released: $ _____

Signature of applicant/developer: _____

Date: _____

For Departmental Use:

Community Development Director Approval: _____

Public Works Director Approval: _____

Letter of Credit # _____ Cash Escrow Account # _____

Previous Authorizations for Release _____, _____, _____

Date of Board of Selectmen approval on Above Request: _____

Amount remaining in Security after above Approval: _____

APPENDIX II: CONSTRUCTION DESIGN DETAILS

A. Catch Basin
B. Precast Concrete Catch Basin With Oil Separator
C. Catch Basin/Drop Inlet
D. Catch Basin Liner
E. Torrent Frame And Grate
F. Reinforced Concrete Headwall
G. Trench Section For Drainage Pipe
H. Roadway Section – Granite Curb
I. Roadway Section – Open Drainage
J. Roadway Section – Closed Drainage
K. Circular Cul-De-Sac
L. Offset Cul-De-Sac
M. Hammerhead Turn-Around
N. Tomahawk Turn-Around
O. Utility Roadway Cross Section
P. Roadway Delineation
Q. Ironwood Guardrail
R. Pavement Restoration

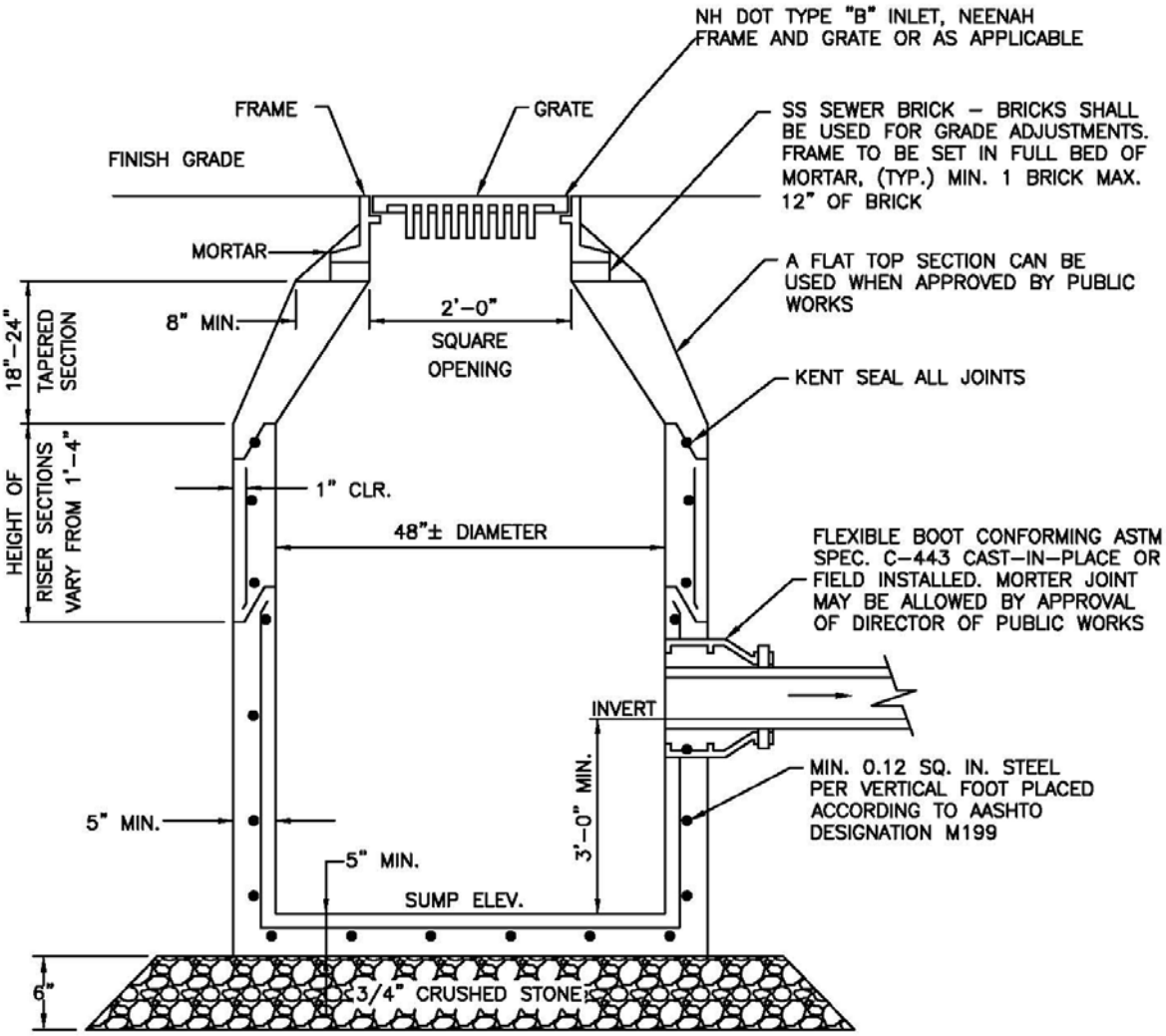

NOTE:

CATCH BASIN STRUCTURE TO BE CAPABLE OF AASHTO H–20 LOADING WITHOUT FAILURE.

THE CONCRETE COMPRESSIVE STRENGTH SHALL BE 5000 PSI MIN.

DRAWN BY: D.K.P.	TOWN OF MILFORD, NEW HAMPSHIRE DESIGN SPECIFICATIONS			
CHECKED BY: R.L.				
APPROVED BY: R.L.	CATCH BASIN	SM	UPDATED	3/10
SCALE: AS SHOWN		REV.	DESCRIPTION	DATE
DATE: NOVEMBER 2003		FIGURE:	D-1	A

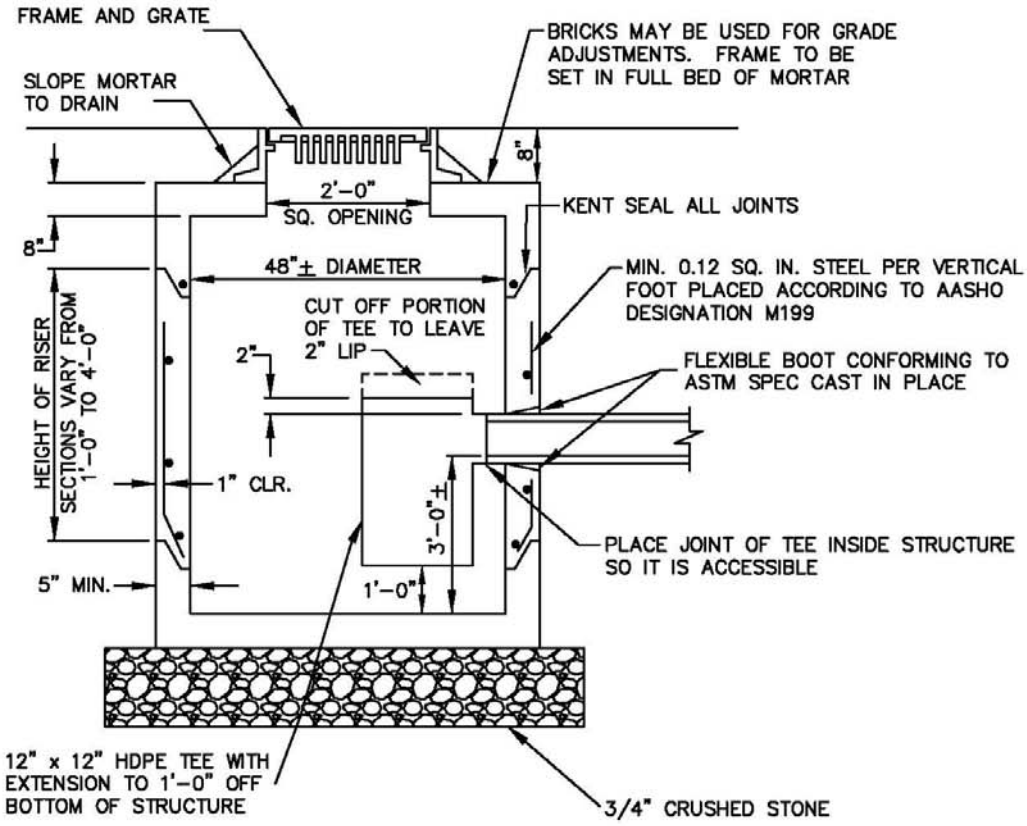

NOTE:

CATCH BASIN STRUCTURE TO BE CAPABLE OF AASHTO H-20 LOADING WITHOUT FAILURE.

THE CONCRETE COMPRESSIVE STRENGTH SHALL BE 5000 PSI MIN.

DRAWN BY: D.K.P.	TOWN OF MILFORD, NEW HAMPSHIRE DESIGN SPECIFICATIONS			
CHECKED BY: R.L.				
APPROVED BY: R.L.	PRECAST CONCRETE CATCH BASIN WITH OIL SEPARATOR	SM	UPDATED	3/10
SCALE: AS SHOWN		REV.	DESCRIPTION	DATE
DATE: NOVEMBER 2003		FIGURE:	D-2	A

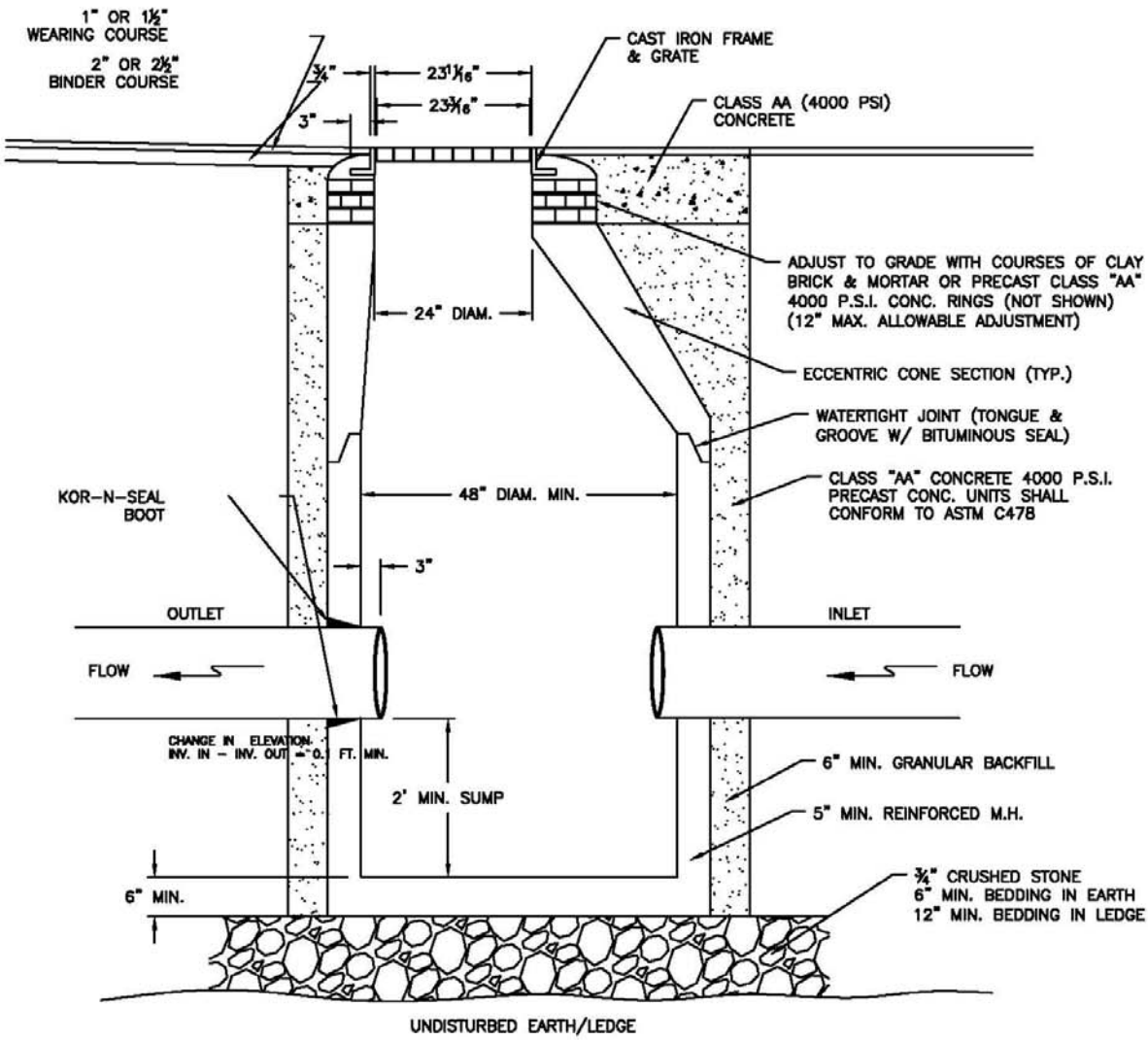

DRAWN BY: D.K.P.	TOWN OF MILFORD, NEW HAMPSHIRE DESIGN SPECIFICATIONS			
CHECKED BY: R.L.				
APPROVED BY: R.L.	D-15 TYPICAL CATCH BASIN/DROP INLET	SM	REV.	3/10
SCALE: NOT TO SCALE		REV.	DESCRIPTION	DATE
DATE: MAR. 2010		FIGURE:	D-15	A

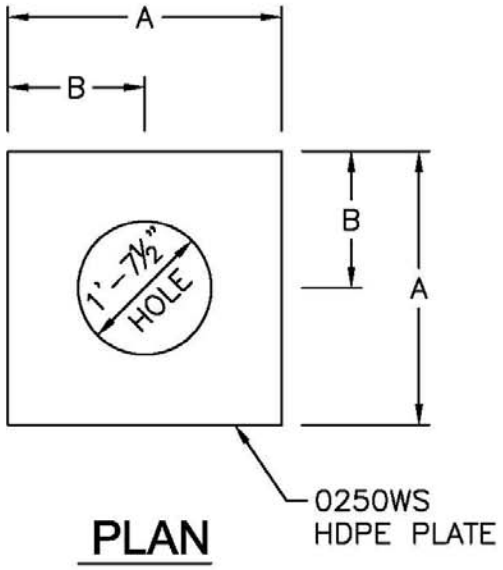

PLAN

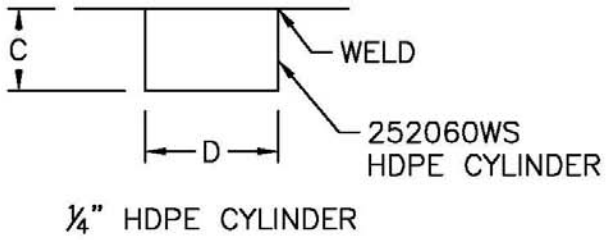

ELEVATION

PART NUMBER	DESCRIPTION	A	B	C	D
2012AN	NHDOT CATCH BASIN LINER	3'-4"	1'-8"	1'-0"	1'-8"

DRAWN BY:	D.K.P.	TOWN OF MILFORD, NEW HAMPSHIRE DESIGN SPECIFICATIONS			
CHECKED BY:	R.L.				
APPROVED BY:	R.L.	NHDOT PE CATCH BASIN LINER DETAIL	SM	REVISIONS	3/10
SCALE:	NOT TO SCALE		REV.	DESCRIPTION	DATE
DATE:	MAR. 2010		FIGURE:	D-5	A

NOTE:

CATCH BASIN STRUCTURE TO BE CAPABLE OF AASHTO H-20 LOADING WITHOUT FAILURE.

THE CONCRETE COMPRESSIVE STRENGTH SHALL BE 5000 PSI MIN.

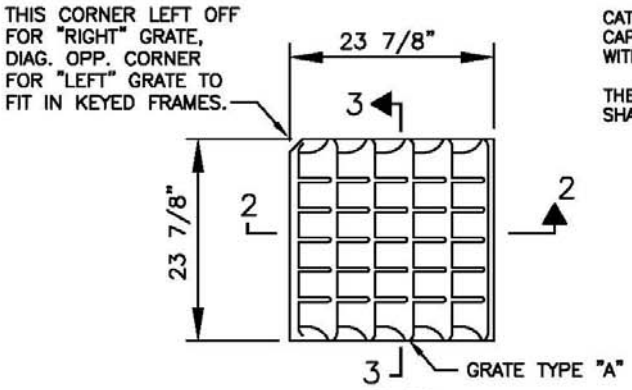

PLAN

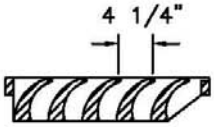

GRATE SECTION 2

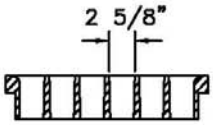

GRATE SECTION 3

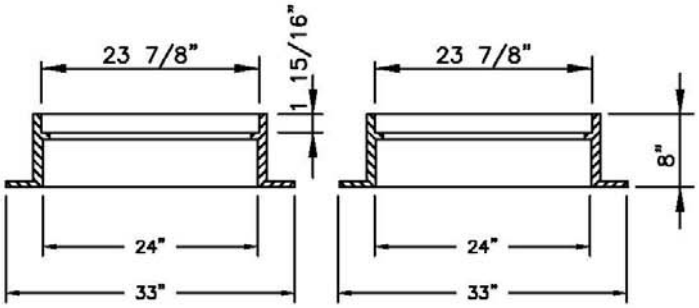

FRAME SECTIONS

TYPE "A" FRAME AND GRATE
(NEENAH R-3588-LL OR APPROVED EQUAL)

NOT TO SCALE

DRAWN BY:	D.K.P.	TOWN OF MILFORD, NEW HAMPSHIRE DESIGN SPECIFICATIONS			
CHECKED BY:	R.L.				
APPROVED BY:	R.L.	TORRENT FRAME AND GRATE	SM	UPDATED	3/10
SCALE:	AS SHOWN		REV.	DESCRIPTION	DATE
DATE:	NOVEMBER 2003		FIGURE:	D-4	A

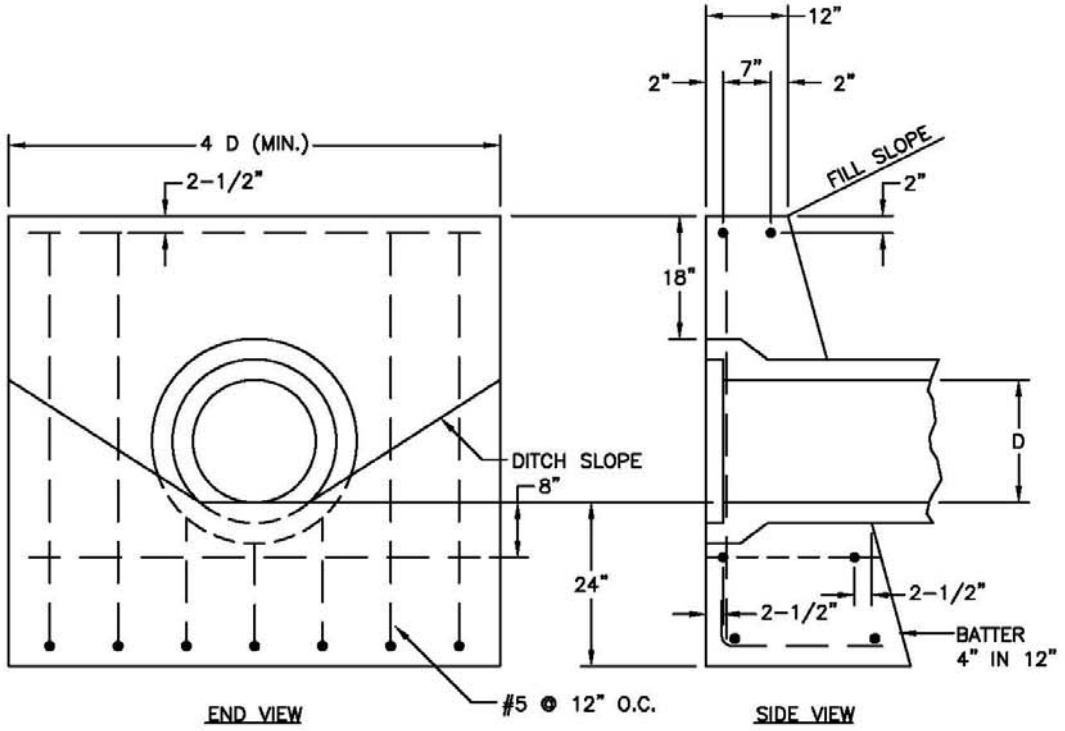

STEEL SCHEDULE FOR REINFORCED CONCRETE HEADWALL

PIPE DIAMETER	12"	15"	18"	24"	30"	36"	42"	48"	54"	60"
NUMBER	4	4	4	6	6	6	8	8	10	10
LENGTH OF BARS	3'-0"	3'-0"	3'-0"	3'-0"	4'-0"	4'-0"	5'-0"	5'-0"	6'-0"	6'-0"

NOTE:

1. ALL REINFORCING STEEL TO BE #5 DEFORMED BARS. CONCRETE QUANTITIES EXCLUDE PIPE DIAMETERS FOR 30" AND OVER. SAME DEDUCTION MADE FOR CONCRETE PIPE AS IS MADE FOR METAL PIPE.

2. PRECAST HEADWALLS ARE CONSIDERED AN EQUAL AS APPROVED BY PUBLIC WORKS.

3. PIPE FLARED END SECTIONS CAN BE PROPOSED IN LIEU OF HEADWALLS AT OUTLET ENDS OF CULVERTS APPROVED BY PUBLIC WORKS ON A CASE BY CASE BASIS.

DRAWN BY: D.K.P.	TOWN OF MILFORD, NEW HAMPSHIRE DESIGN SPECIFICATIONS			
CHECKED BY: R.L.				
APPROVED BY: R.L.	REINFORCE CONCRETE HEADWALL	SM	UPDATED	3/10
SCALE: AS SHOWN		REV.	DESCRIPTION	DATE
DATE: NOVEMBER 2003		FIGURE:	D-6	A

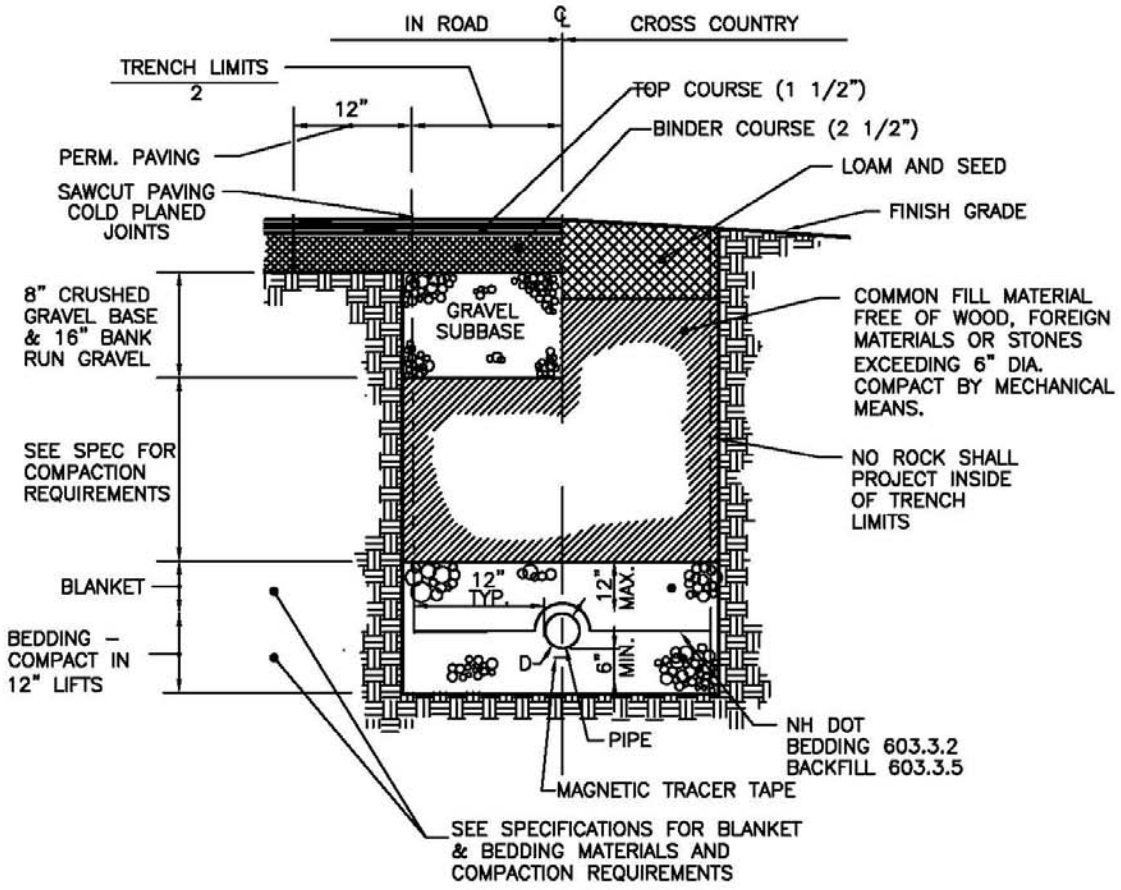

DRAWN BY:	D.K.P.	TOWN OF MILFORD, NEW HAMPSHIRE DESIGN SPECIFICATIONS			
CHECKED BY:	R.L.				
APPROVED BY:	R.L.	TRENCH SECTION	SM	UPDATED	3/10
SCALE:	AS SHOWN	FOR DRAINAGE PIPES	REV.	DESCRIPTION	DATE
DATE:	NOV. 2003		FIGURE:	G-1	A

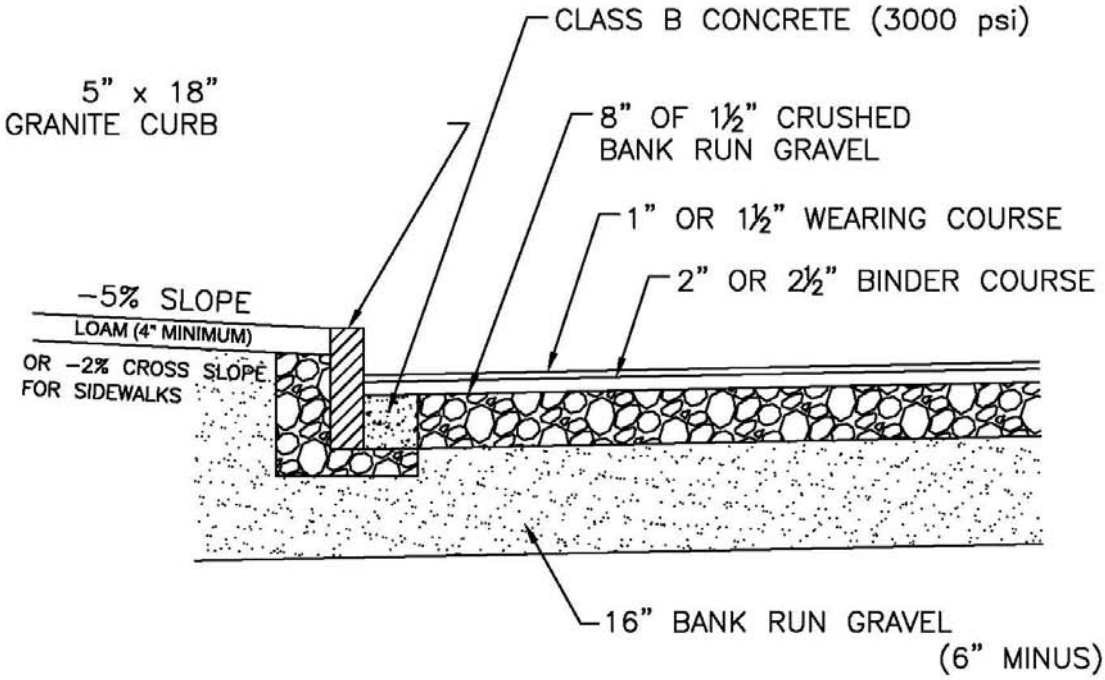

DRAWN BY:	D.K.P.	TOWN OF MILFORD, NEW HAMPSHIRE DESIGN SPECIFICATIONS			
CHECKED BY:	R.L.				
APPROVED BY:	R.L.	D-19 GRANITE CURB DETAIL ROAD SECTION	SM	REV.	3/10
SCALE:	NOT TO SCALE		REV.	DESCRIPTION	DATE
DATE:	MAR. 2010		FIGURE:	D-19	A

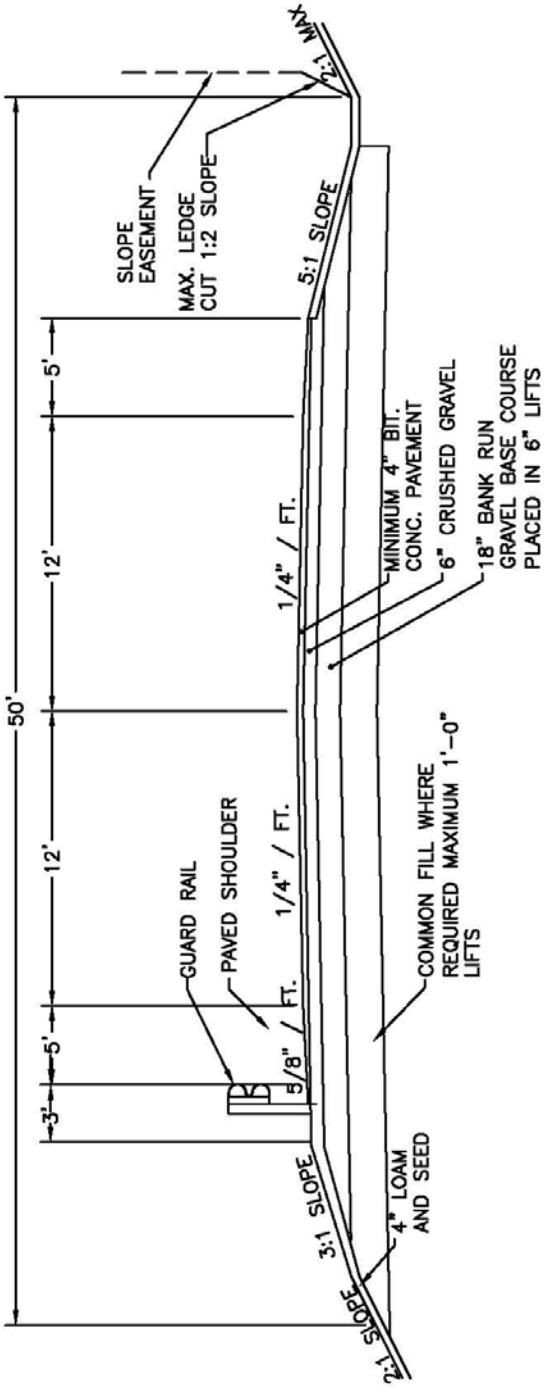

NOTES:

1. ROADWAY WIDTH SHALL COMPLY WITH ROADWAY STANDARDS TABLE
2. ALL ROADWAY SLOPES 3:1 OR GREATER REQUIRE GUARDRAILS

DRAWN BY:	D.K.P.	TOWN OF MILFORD, NEW HAMPSHIRE DESIGN SPECIFICATIONS			
CHECKED BY:	R.L.				
APPROVED BY:	R.L.	ROADWAY SECTION OPEN DRAINAGE	SM	UPDATED	3/10
SCALE:	AS SHOWN		REV.	DESCRIPTION	DATE
DATE:	NOV. 2003		FIGURE:	R-01	A

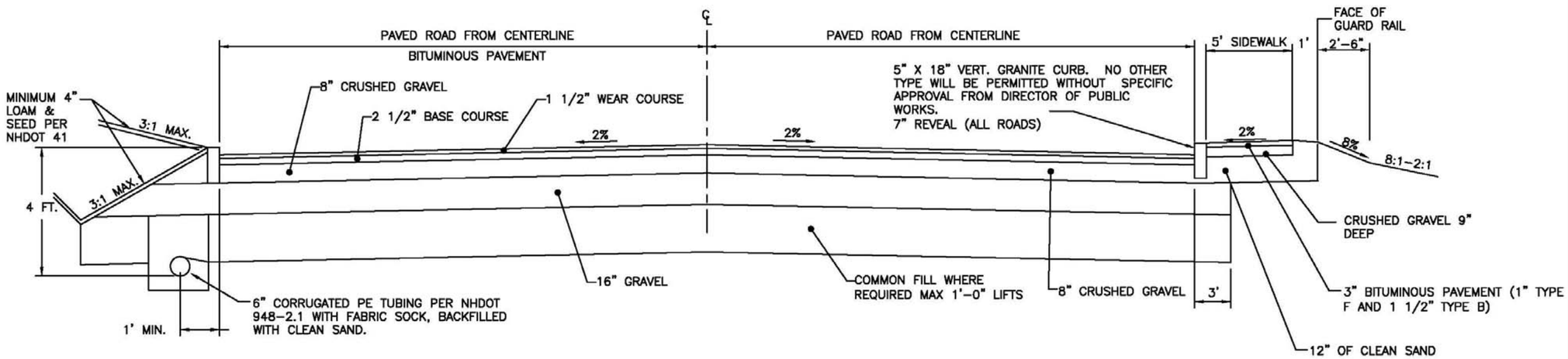

CATCH BASIN PLACEMENT

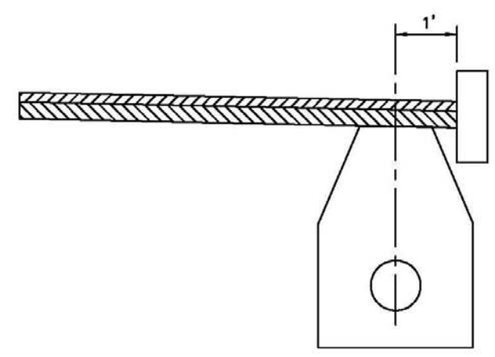

NOTES:

1. CONSTRUCT MATTING FOR EROSION CONTROL ON ALL DITCHES UP TO 5% SLOPE. DITCHES STEEPER THAN 5% MUST BE PROTECTED BY USING A STONE LINED SWALE OR OTHER ENGINEERED METHOD. CALCULATIONS MUST BE SUBMITTED AND APPROVED AS PART OF.

2. ITEM NUMBERS REFER TO THE LATEST EDITION OF THE NHDOT STANDARD SPECIFICATIONS FOR ROAD & BRIDGE CONSTRUCTION.

3. ROADWAY WIDTH SHALL COMPLY WITH ROADWAY STANDARDS TABLE.

DRAWN BY:	D.K.P.	TOWN OF MILFORD, NEW HAMPSHIRE DESIGN SPECIFICATIONS			
CHECKED BY:	R.L.				
APPROVED BY:	R.L.	TYPICAL CLOSED DRAINAGE ROADWAY CROSS-SECTION	SM	REV.	3/10
SCALE:	NOT TO SCALE		REV.	DESCRIPTION	DATE
DATE:	NOV. 2003		FIGURE:	R-02	B

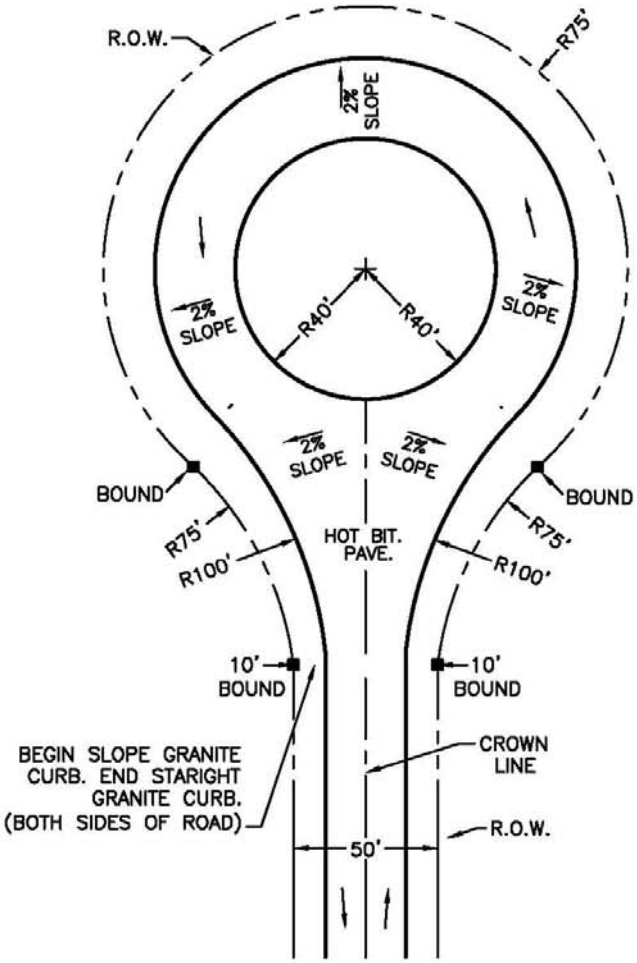

NOTES:

1. ALL CURBING SHALL BE GRANITE CURB, WHEN CURBING IS REQUIRED.
2. BOUNDS SHALL BE CONSTRUCTED AT EACH PROPERTY LINE INTERSECTION WITH THE R.O.W.
3. THE AREA INSIDE THE ISLAND SHALL BE CLEARED OF ALL BRUSH AND SHRUBS, LOAMED WITH A MINIMUM 6" OF LOAM AND SEEDED FOR GRASS VEGETATION.
4. THE AREA INSIDE THE ISLAND SHALL BE GRADED TO DRAIN TO THE STREET.
5. ROADWAY WIDTHS SHALL COMPLY WITH ROADWAY STANDARDS TABLE.

PLAN VIEW

SCALE: 1" = 50'

DIMENSIONS ARE TO FACE OF CURB

DRAWN BY:	D.K.P.	TOWN OF MILFORD, NEW HAMPSHIRE DESIGN SPECIFICATIONS			
CHECKED BY:	R.L.				
APPROVED BY:	R.L.	CIRCULAR CUL-DE-SAC	SM	UPDATED	3/10
SCALE:	AS SHOWN		REV.	DESCRIPTION	DATE
DATE:	NOV. 2003		FIGURE:	R-03	A

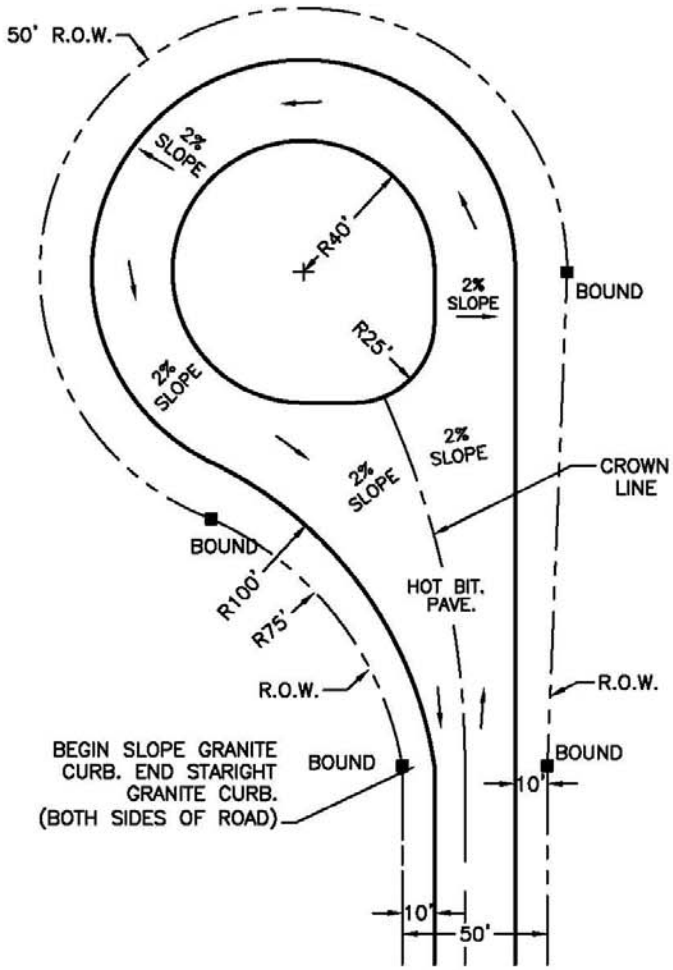

NOTES:

1. ALL CURBING SHALL BE GRANITE CURB, WHEN CURBING IS REQUIRED.
2. BOUNDS SHALL BE CONSTRUCTED AT EACH PROPERTY LINE INTERSECTION WITH THE R.O.W.
3. THE AREA INSIDE THE ISLAND SHALL BE CLEARED OF ALL BRUSH AND SHRUBS, LOAMED WITH A MINIMUM 6" OF LOAM AND SEEDED FOR GRASS VEGETATION.
4. THE AREA INSIDE THE ISLAND SHALL BE GRADED TO DRAIN TO THE STREET.
5. ROADWAY WIDTHS SHALL COMPLY WITH ROADWAY STANDARDS TABLE.

PLAN VIEW

SCALE: 1" = 50'

DIMENSIONS ARE TO FACE OF CURB

DRAWN BY:	D.K.P.	TOWN OF MILFORD, NEW HAMPSHIRE DESIGN SPECIFICATIONS			
CHECKED BY:	R.L.				
APPROVED BY:	R.L.	OFFSET CUL-DE-SAC	SM	UPDATED	3/10
SCALE:	AS SHOWN		REV.	DESCRIPTION	DATE
DATE:	NOV. 2003		FIGURE:	R-04	A

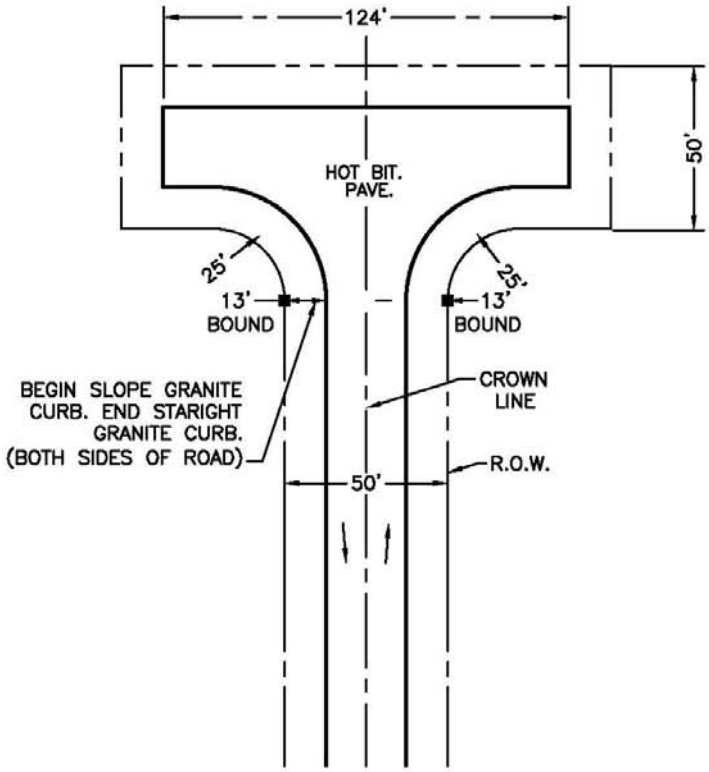

NOTES:

1. ALL CURBING SHALL BE GRANITE CURB, WHEN CURBING IS REQUIRED.
2. BOUNDS SHALL BE CONSTRUCTED AT EACH PROPERTY LINE INTERSECTION WITH THE R.O.W.
3. ROADWAY WIDTHS SHALL COMPLY WITH ROADWAY STANDARDS TABLE.
4. DRIVEWAYS SHALL NOT BE ALLWED DIRECTLY OFF THE ENDS OF THE HAMMERHEAD

PLAN VIEW

SCALE: 1" = 50'

DIMENSIONS ARE TO FACE OF CURB

DRAWN BY:	D.K.P.	TOWN OF MILFORD, NEW HAMPSHIRE DESIGN SPECIFICATIONS			
CHECKED BY:	R.L.				
APPROVED BY:	R.L.	HAMMERHEAD TURN-AROUND	SM	UPDATED	3/10
SCALE:	AS SHOWN		REV.	DESCRIPTION	DATE
DATE:	NOV. 2003		FIGURE:	R-05	A

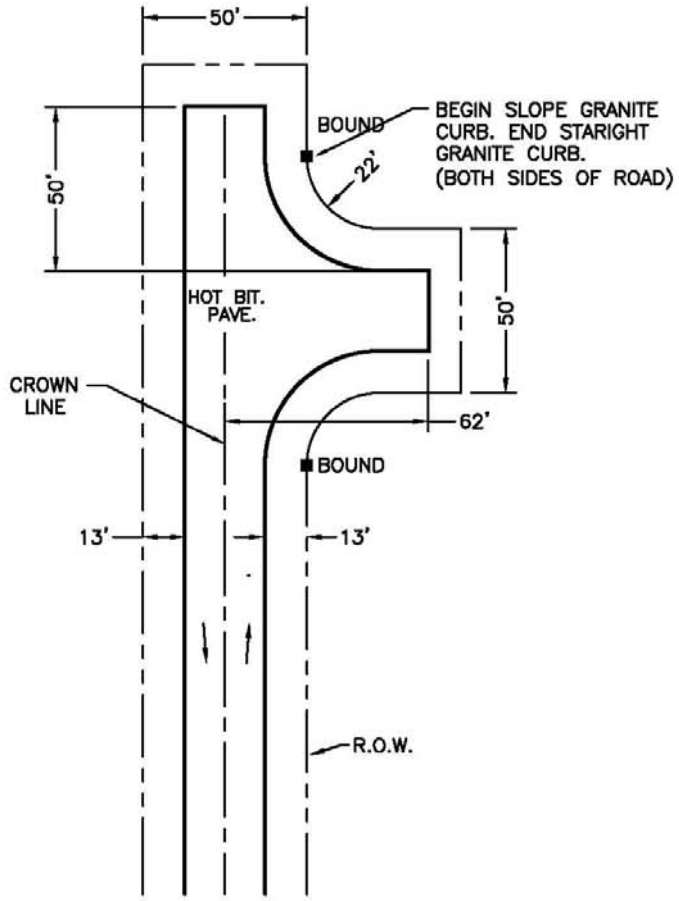

NOTES:

1. ALL CURBING SHALL BE GRANITE CURB, WHEN CURBING IS REQUIRED.
2. BOUNDS SHALL BE CONSTRUCTED AT EACH PROPERTY LINE INTERSECTION WITH THE R.O.W.
3. ROADWAY WIDTHS SHALL COMPLY WITH ROADWAY STANDARDS TABLE.
4. DRIVEWAYS SHALL NOT BE ALLOWED DIRECTLY OFF THE ENDS OF THE TOMAHAWK.

PLAN VIEW

SCALE: 1" = 50'

DIMENSIONS ARE TO FACE OF CURB

DRAWN BY:	D.K.P.	TOWN OF MILFORD, NEW HAMPSHIRE DESIGN SPECIFICATIONS			
CHECKED BY:	R.L.				
APPROVED BY:	R.L.	TOMAHAWK TURN-AROUND	SM	UPDATED	3/10
SCALE:	AS SHOWN		REV.	DESCRIPTION	DATE
DATE:	NOV. 2003		FIGURE:	R-06	A

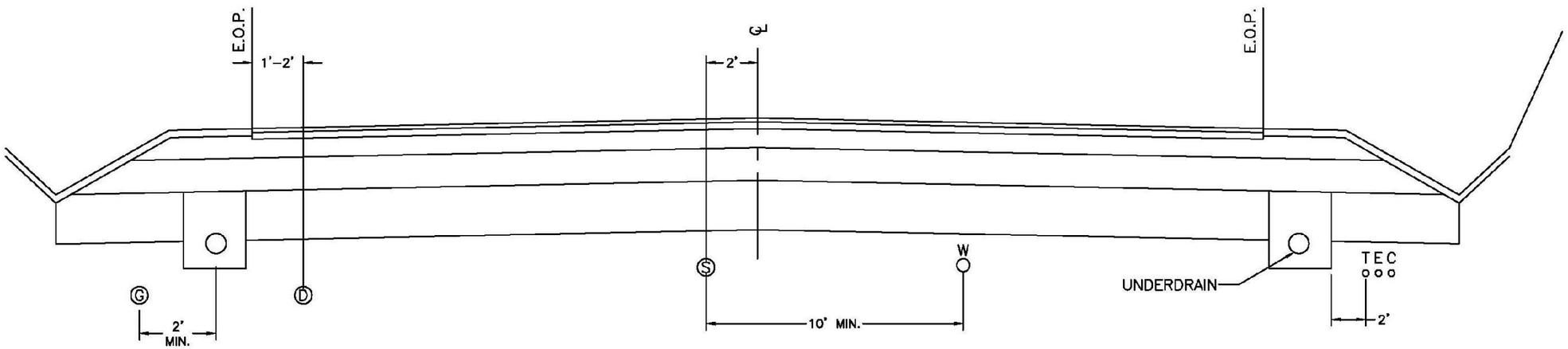

LEGEND

EOP	=	EDGE OF PAVEMENT
G	=	GAS
D	=	DRAIN
S	=	SEWER
W	=	WATER
T	=	TELEPHONE
E	=	ELECTRIC
C	=	CABLE
℄	=	CENTER LINE

NOTE: ALL PEDISTALS AND UTILITY BOXES SHALL BE LOCATED OUTSIDE OF THE DITCHLINE, FURTHEST FROM THE PAVED SURFACE OF THE R.O.W.

DRAWN BY:	D.K.P.
CHECKED BY:	R.L.
APPROVED BY:	R.L.
SCALE:	AS SHOWN
DATE:	NOV. 2003

TOWN OF MILFORD, NEW HAMPSHIRE
DESIGN SPECIFICATIONS

UTILITY ROADWAY
CROSS SECTION

REV.	DESCRIPTION	DATE
SM	UPDATED	3/10

FIGURE: G-04 B

DELINEATOR SPACING

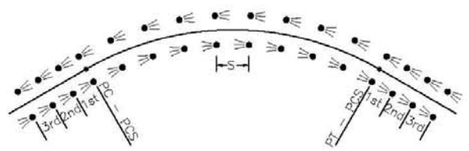

POST MOUNTED SPACING FOR HORIZONTAL CURVES

(SEE STD. NO. DL-2 FOR RAMPS AND LOOPS)

RADIUS OF CURVE (m)	SPACING ON CURVE = S (m)	1st SPACE BEYOND PC – PT (m)	2nd SPACE BEYOND PC – PT (m)	3rd SPACE BEYOND PC – PT (m)
OVER 5000	80	80	80	80
4000 – 5000	80	80	80	80
2000 – 3999	60	80	80	80
650 – 1999	40	72	80	80
200 – 649	20	36	60	80
50 – 199	10	18	30	60
20 – 49	5	9	15	60
UNDER 20	5	9	15	60

SPACING FOR SPECIFIC RADII NOT SHOWN MAY BE INTERPOLATED FROM THE TABLE OR COMPUTED FROM THE FORMULA $S=2\sqrt{0.3R}$. THE MINIMUM SPACING SHALL BE 5.0 METERS. THE SPACING ON CURVES SHOULD NOT EXCEED 80 METERS. THE SPACING OF THE FIRST DELINEATOR BEYOND A CURVE IS 2S, THE SECOND IS 3S, AND THE THIRD IS 6S BUT NOT TO EXCEED 80 METERS. THE TANGENT SPACING SHALL BE 80 METERS.

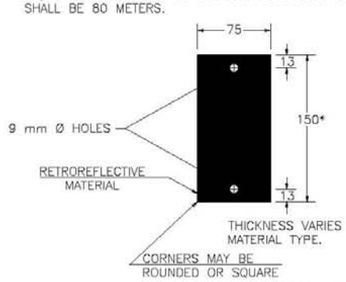

* 300 mm SINGLE PIECE MAY BE USED FOR DOUBLE DELINEATOR

RETROREFLECTIVE DELINEATOR

(ITEM 621.3X, 621.4)

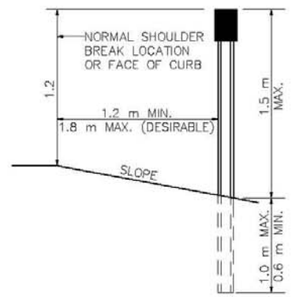

TYPICAL INSTALLATION

(ITEM 621.31)

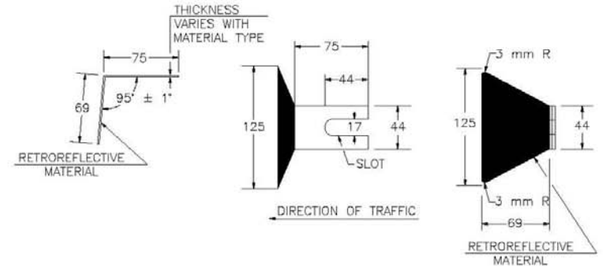

RETROREFLECTIVE BEAM GUARDRAIL DELINEATOR

(ITEM 621.2)

SPACING FOR BEAM GUARDRAIL DELINEATORS ON HORIZONTAL CURVES MIN. OF 4 POSTS, MAX. OF 16 POSTS TANGENT SPACING SHALL BE 16 POSTS	
RADIUS OF CURVE (IN METERS)	SPACING ON CURVE (NO. OF POSTS)
774 AND OVER	16
680 – 773	15
593 – 679	14
511 – 592	13
435 – 510	12
366 – 434	11
302 – 365	10
244 – 301	9
194 – 243	8
148 – 193	7
108 – 147	6
76 – 107	5
75 AND UNDER	4

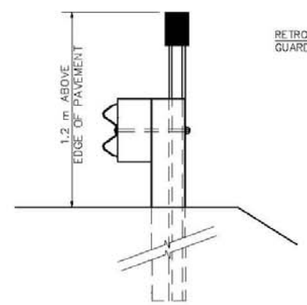

DELINEATOR WITHIN GUARDRAIL SECTION

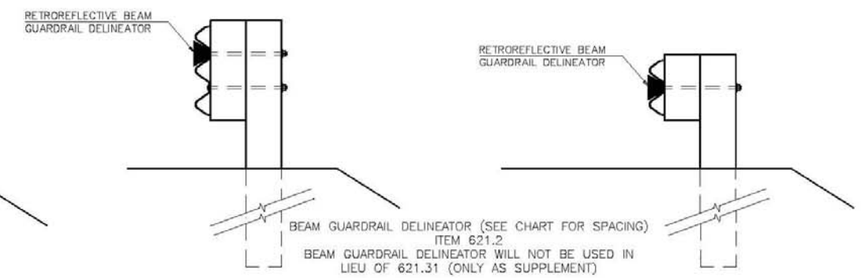

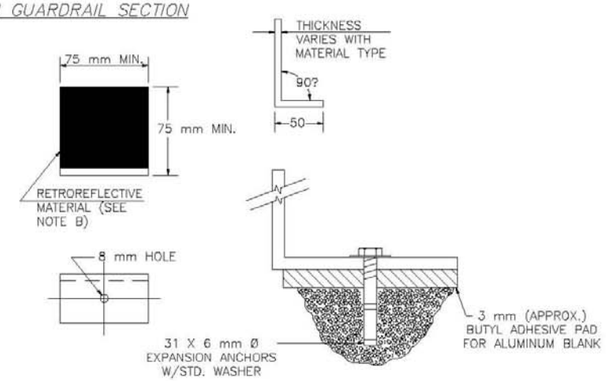

RETROREFLECTIVE CONCRETE MEDIAN BARRIER DELINEATOR

(ITEM 621.1)

GENERAL NOTES

1. UNLESS OTHERWISE ORDERED, DELINEATORS SHALL BE MOUNTED ALONG THE RIGHT SIDE OF ALL ROADWAYS (SEE TYPICAL). DELINEATORS MAY ALSO BE USED ON THE LEFT SIDE OF DIVIDED HIGHWAYS WHERE NEEDED FOR CLEAR INDICATION OF THE ALIGNMENT.
2. DELINEATORS LOCATED BEHIND GUARDRAIL SHALL BE INSTALLED SO THAT THE DELINEATOR POST IS ADJACENT TO THE TRAILING EDGE OF THE NEAREST GUARDRAIL POST.
3. WHEN DELINEATION IS USED ONLY ON CURVES, THREE DELINEATORS SHALL BE PLACED BEFORE AND AFTER THE CIRCULAR PORTION OF THE CURVE.
4. WHEN DELINEATION IS USED ON TANGENTS, THE SPACING SHALL BE 80 METERS. THE TANGENT SPACING SHALL BEGIN BEYOND THE SPACING REQUIREMENTS FOR CURVES.
5. DELINEATOR COLORS SHALL IN ALL CASES CONFORM TO THE COLOR OF THE EDGELINES.
6. DELINEATORS WILL NOT BE PLACED BEHIND SIDEWALK.

GENERAL NOTES

A. THIS DELINEATOR IS TO BE PLACED ON TOP OF CONCRETE BARRIER.

B. IF GLARE SCREEN IS PLACED ON TOP OF THE CONCRETE BARRIER, THEN DELINEATORS ARE ATTACHED TO EITHER SIDE OF THE BARRIER AND DO NOT NEED TO BE RETRO-REFLECTORIZED ON BOTH SIDES.

C. YELLOW DELINEATOR FOR MEDIAN BARRIERS SHALL BE LOCATED ON THE LEFT SIDE OF THE ROADWAY FACING TRAFFIC IN BOTH DIRECTIONS, BEGINNING AT THE FIRST FULL HEIGHT OF THE CONCRETE MEDIAN BARRIER AND SPACED ACCORDING TO CHART FOR BEAM GUARDRAIL DELINEATORS.

DRAWN BY:	D.K.P.
CHECKED BY:	R.L.
APPROVED BY:	R.L.
SCALE:	NOT TO SCALE
DATE:	MARCH 2010

TOWN OF MILFORD, NEW HAMPSHIRE
DESIGN SPECIFICATIONS

ROADSIDE DELINEATION

REV.	DESCRIPTION	DATE

FIGURE: DL-1 B

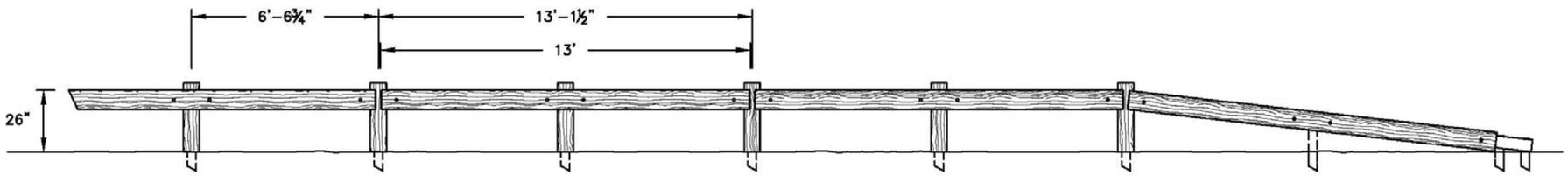

ELEVATION

PLAN

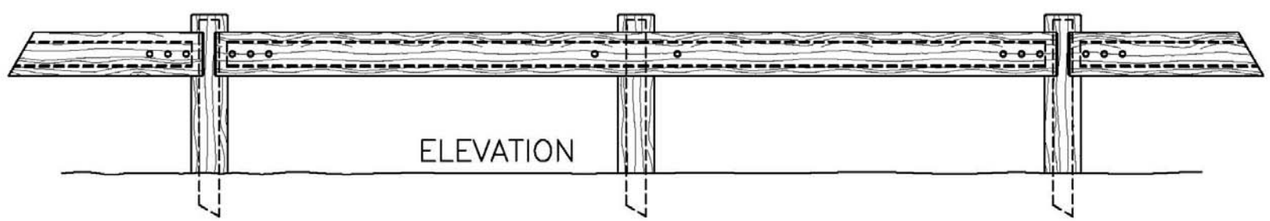

ELEVATION

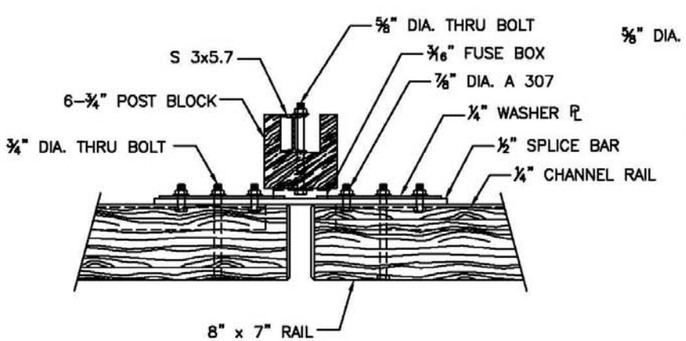

PLAN

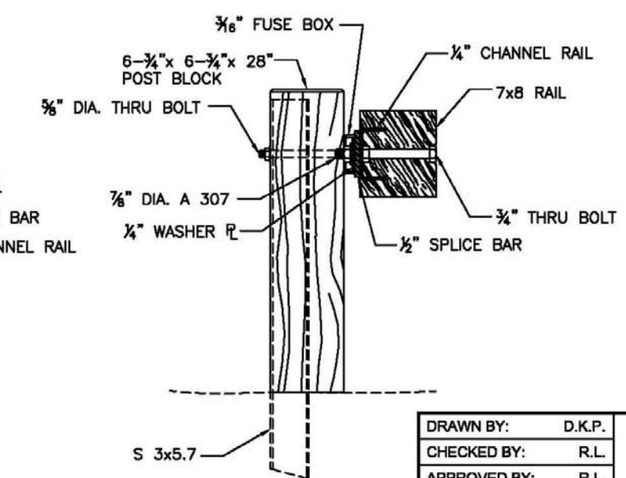

ELEVATION

ALL WOOD POSTS ARE PRESSURE TREATED RED PINE No. 2
E=1,100 Ksi & Fb=675 Psi or BETTER

ALL WOOD RAILS ARE PRESSURE TREATED DOUGLAS-FIR
E=1,000 Ksi 7 MODULUS OF RUPTURE=7,100 Psi or BETTER

ALL STEEL ASTM A36 & HOT DIP GALVANIZED PER ASTM A123

ALL HARDWARE TO BE ASTM A 307 & GALVANIZED PER ASTM A153

DRAWN BY:	D.K.P.
CHECKED BY:	R.L.
APPROVED BY:	R.L.
SCALE:	NOT TO SCALE
DATE:	MARCH 2010

TOWN OF MILFORD, NEW HAMPSHIRE
DESIGN SPECIFICATIONS

IRONWOOD GUIDERAIL

REV.	DESCRIPTION	DATE
SM	REV.	3/10

FIGURE: IRNWD-1 B

Procedures for repairs of trench cuts on City roads

1. Pavement shall be sawcut along the ditch line. Any undermined areas that inadvertenly develop shall have the projecting pavement saw cut and removed.

2. Trench backfill shall be compacted in exceptalbe lifts according to Street Opening Permit or approved plans.

3. A 4 inch depth - ¾" type B hot bituminous patch shall be laid in two (2") inch depth lifts.

4. The patch shall be allowed to settle for a minimum of 60 days (or time determined by Director of DPW).

5. After suitable exposure to traffic compaction as determined by the Director of Public Works, the pavement shall be milled to a depth of 1 ¾" providing a minimum 18 inch overlap onto existing undisturbed pavement.

6. Care must be taken to identify and offset the location of the joint before cold planing.

7. The milled area shall be paved with ½" type E hot bituminous pavement meeting NH DOT 401 pavement specifications. The new to old pavement joints shall be sealed with a crack and joint sealer.

Transverse Patch more than half the width of pavement

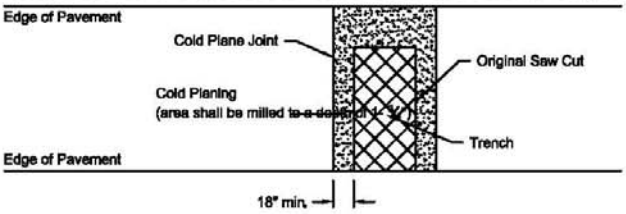

Transverse Patch less than half the width of pavement

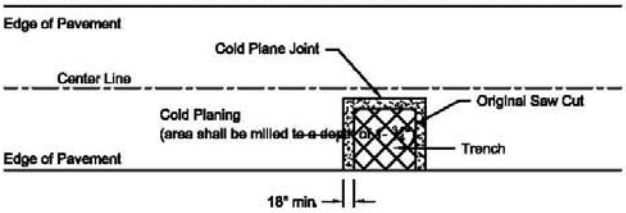

Cross sectional view

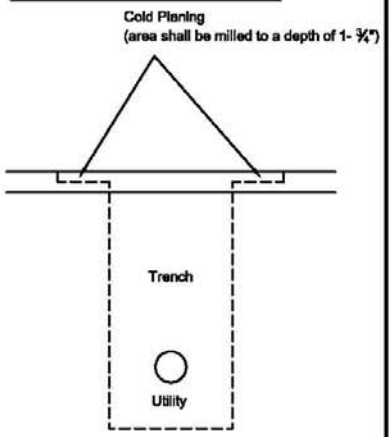

Longitudinal patch at a cross street

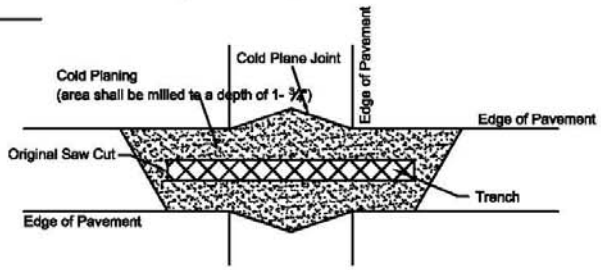

DRAWN BY: D.K.P.	TOWN OF MILFORD, NEW HAMPSHIRE DESIGN SPECIFICATIONS			
CHECKED BY: R.L.				
APPROVED BY: R.L.	PAVEMENT RESTORATION DETAIL	SM	REV.	3/10
SCALE: NOT TO SCALE		REV.	DESCRIPTION	DATE
DATE: MAR. 2010		FIGURE:	D-18	A

APPENDIX III: ROADWAY STANDARDS CHARTS

Table 1: Roadway Standards

Street Type	ADT (Average Daily Traffic)[2]	Maximum Length	Minimum Pavement Width & Shoulders	Min/Max Grade[1]	Minimum ROW	Sidewalks/Bike Lanes Required	Other Requirements
			Roadway Standards				
Public:							
Dead-end	Less than 250 ADT	1,000 ft - measured from center line of intersection to midpoint of turnaround	20/4	1%/8%	50	Dependent upon location, residential densities and adjacent or nearby current or future land uses	See DPW Infrastructure Design, Construction and Administration Standards for typical cross-section and all construction requirements
Local	251 to 1,000 ADT	Must Provide a through connection between Local or Collector roads	22/4	1%/8%	50	Dependent upon location, residential densities and adjacent or nearby current or future land uses	same as above
Collector	1,000 to 4,999 ADT	Must Provide a through connection between Local or Collector roads	24/8	1%/6%	50	Yes	same as above
Arterial	5,000 or more ADT	Must Provide a through connection to Local or Collector roads	24/8	1%/6%	75	Yes	same as above
Private:							
Dead-end	Less than 250 ADT	1,000 ft - measured from center line of intersection to midpoint of turnaround	20/4 or may be reduced by agreement between Board, DPW and Applicant	1%/8%	50	Dependent upon location, residential densities and adjacent or nearby current or future land uses	See DPW Infrastructure Design, Construction and Administration Standards for typical cross-section and all construction requirements
Local	251 to 1,000 ADT	Must Provide a through connection between Local or Collector roads	22/4 or may be reduced by agreement between Board, DPW and Applicant	1%/8%	50	Dependent upon location, residential densities and adjacent or nearby current or future land uses	same as above

[1]**Abrupt or sever transitions in grades, shall require the DPW Director approval.** [2]ADT rates for the development shall be determined using the Institute of Transportation Engineers (ITE) Trip Generation standards. Trip generation rates from other local sources may be used if the applicant demonstrates that these sources better reflect the local condition. Existing ADT shall be determined from actual counts.

Table 2: Geometric & Structural Guides for Roads

Geometric & Structural Guides for Roads

Roadway Types	**Gravel (Private Only)**	**Dead-end**	**Local**	**Collector**	**Arterial**
Average Daily Traffic Count (ADT)	0-50	0-250	251-1,000	1,001-4,999	5,000+
Pavement Width Minimum	20'	20'	22'	24'	24'
Shoulder Width	4'	4'	4'	8'	8'
Pavement	1.5" ATG[1]				
Binder Course	N/A	2 1/2"	2 1/2"	2 1/2"	2 1/2"
Finish Wearing Course	N/A	1 1/2"	1 1/2"	1 1/2"	1 1/2"
Slope of Roadway (min/max)[2]	1%/8%	1%/8%	1%/8%	1%/6%	1%/6%
Minimum Centerline Radii	100 ft	100 ft	200 ft	300 ft	400 ft
Base Course Gravel Depth	16"	16"	16"	16"	24"
Finish Course Depth 11/2" Crushed Gravel	8"	8"	8"	8"	8"

[1]ADT = Asphalt Treaded Gravel of not less than 1 gallon asphalt per square yard.
[2]Abrupt or sever changes in grades shall require the Director of Public Works approval.
Note: These guides are intended to apply to both public and private roadways.

APPENDIX IV: SEED MIXTURES – NH STORMWATER MANUAL

Table 1: Seed Mixture Selection Based on Soil Type

Use	Seed Mixture See Table 2	Soil Drainage			
		Droughty	**Well Drained**	**Moderately Well Drained**	**Poorly Drained**
Steep cuts and fills, borrow and disposal areas	A	Fair	Good	Good	Fair
	B	Poor	Good	Fair	Fair
	C	Poor	Good	Excellent	Good
	D	Fair	Fair	Good	Excellent
	E	Fair	Excellent	Excellent	Poor
Waterways, emergency spillways and other channels with flowing water	A	Good	Good	Good	Fair
	C	Good	Excellent	Excellent	Fair
	D	Good	Excellent	Excellent	Fair
Lightly used parking lots, odd areas, unused lands, and low intensity use recreation sites	A	Good	Good	Good	Fair
	B	Good	Good	Fair	Poor
	C	Good	Excellent	Excellent	Fair
	D	Fair	Good	Good	Excellent
Play areas and athletic fields. (Topsoil is essential for good turf.)	F	Fair	Excellent	Excellent	See Note 2 in Table 2
	G	Fair	Excellent	Excellent	See Note 2 in Table 2
Gravel Pit	See source document for recommendations, or consult with USDA Natural Resources Conservation Service.				

Source: Minick, E.L. and H. T. Marshall. (August 1992)
Note: Poorly drained soils are not desirable for use as playing areas and athletic fields.

Table 2: Seed Mixtures for Permanent Vegetation

Mixture	Species	**Pounds per Acre**	**Pounds per 1,000 Sq. Ft**
A	Tall fescue	20	0.45
	Creeping red fescue	20	0.45
	Redtop	2	0.05
	Total	*42*	0.95
B[3]	Tall fescue	15	0.35
	Creeping red fescue	10	0.25
	Crown Vetch	15	0.35
	or	-	-
	Flat pea	30	0.75
	Total	*40 or 55*	0.95 or 1.35
C[3]	Tall fescue	20	0.45
	Creeping red fescue	20	0.45
	Birdsfoot trefoil	8	0.20
	Total	*48*	1.10
D[3]	Bridsfoot trefoil	10	0.25
	Retop	5	0.10
	Reed Canarygrass[1]	15	0.35
	Total	30	0.70
E	Tall fescue	20	0.45
	Flatpea	30	0.75
	Total	50	1.20
F	Creeping red fescue[2]	50	1.15
	Kentucky bluegrass[2]	50	1.15
	Total	100	2.30
G	Tall Fescue[2]	150	3.60

Source: Minnick, E.L. and H.T. Marshall. (August 1992).

Notes:

1. Reed canary grass is on the invasive species watch list due to its rapid, aggressive growth and its ability to move into wetlands and out-compete other desirable wetland plants. Caution should be used when planted near wetlands.
2. For heavy use athletic fields, consult University of New Hampshire Cooperative Extension Turf Specialist for current varieties and seeding rates.
3. The University of New Hampshire Cooperative Extension recommends red clover to substitute for crown vetch or birdsfoot trefoil if they are going to be mowed to a height of 4 inches or less. Red clover (Alsike variety) should be seeded at a rate of 20 pounds per acre.

APPENDIX V: BLASTING & EXPLOSIVE REGULATIONS

TOWN OF MILFORD
FIRE DEPARTMENT

Chapter 5.11

EXPLOSIVES AND BLASTING REGULATIONS

In accordance with New Hampshire State Law, RSA 154:18, the following regulations are established relative to the transportation, storage, possession, and use of explosive materials in the Town of Milford, New Hampshire.

5.11.10 Short title of regulations.
These regulations shall be known and may be cited as "Explosives and Blasting Regulations."

5.11.20 Applicability.
The Explosives and Blasting Regulations shall apply to the transportation, storage, possession, and use of explosive materials in the Town of Milford.

5.11.21 These regulations shall not apply to:

A. Explosive materials while in the course of transportation via railroad, water, highway, or air when explosive materials are moving under the jurisdiction of and in conformity with regulations adopted by any federal or state department or agency.

B. The normal and emergency conditions of any government, including all departments, agencies, and divisions thereof, provided that they are acting in their official capacity and in the proper performance of their duties.

C. Explosive materials for delivery to any government or any department, agency, or division thereof.

D. Pyrotechnics commonly known as "fireworks" including signaling devices such as flares or fuses.

E. Small arms, ammunition and components thereof which are subject to the Gun Control Act of 1968 (Title 18, Chapter 44 of the United States Code) and regulations promulgated there under.

F. Gasoline, fertilizers and propellants used in propellant activated power devices or tools.

5.11.30 Definitions.
As used in this chapter, the following terms shall have the meanings indicated:

AUTHORIZED, APPROVED, OR APPROVAL – Authorized, approved, or approval by the Fire Chief of the Town of Milford, NH.

BLAST AREA – The area of the blast within the influence of flyrock, gasses and concussion.

BLASTER – That qualified person in charge of and responsible for the loading and firing of a blast.

BLASTING AGENT – An explosive material which meets prescribed criteria for insensitivity to initiation in conformity with Title 27 of the Code of Federal Regulations, Section 55.11 for storage, and, Title 49 of the Code of Federal Regulations for transportation.

DETONATING CORD – A flexible cord containing a center core of high-velocity explosive and used to initiate other explosives.

DETONATOR – Any device containing any initiating or primary explosive that is used for initiating detonation. This term includes, but is not limited to, electric blasting caps of instantaneous and delay types, blasting caps for use with safety fuses, detonating cord delay connectors and non-electric instantaneous and delay blasting caps which use detonating cord or other replacement for electric lag wires.

EXPLOSIVE – Any chemical compound mixture or device, the primary or common purpose of which is to function by explosion.

EXPLOSIVE MATERIALS – These include explosives, blasting agents and detonators. The term includes but is not limited to, dynamite and other high explosives, safety fuses, detonating cord and igniters. Title 49 of the Code of Federal Regulations, Parts 1 through 999, subdivide these materials into:

a. Class A explosives: detonating or otherwise maximum hazards.
b. Class B explosives: flammable hazard.
c. Class C explosives: minimum hazard.
d. Blasting agents: See definition,

FIRE CHIEF – The Fire Chief of the Town of Milford, NH, or his designee.

HIGH EXPLOSIVES – Explosives which are characterized by a very high rate of reaction, high pressure development, and the presence of a detonation wave in the explosive.

PERSON – Any individual, corporation, company, association, firm, partnership, society, or joint stock company.
PYROTECHNICS – Any combustible or explosive compositions or manufactured articles designed and prepared for the purpose of producing audible or visible effects. Pyrotechnics are commonly referred to as fireworks.

SAFETY FUSE – A flexible cord containing an internal burning medium by which fire or flame is conveyed at a continuous and uniform rate from the point of ignition to the point of use, usually a fuse detonator.

5.11.40 Forms and procedures.
The Fire Chief shall issue forms necessary or useful for carrying out the purposes of this chapter. He may also establish procedures necessary or useful for carrying out the purposes of this chapter which are consistent with the provisions of this chapter.

5.11.50 Violations and penalties.
Any person who violates any provision of this chapter commits a separate violation of this chapter and shall be subject to a civil fine of not more than $500.00 for each separate violation.

5.11.60 Licenses and Permits.

5.11.61 Applicability of Chapter.
Safety and security are primary considerations in the manufacture, transportation, storage, sale, possession, and use of explosive materials. An appropriate and thorough system of licensing or permitting is designed to promote these considerations by assuring that these products come only into the hands of qualified persons who require them in their own occupation.

A. The license and permit requirements of this chapter shall apply to all explosive materials.
B. This chapter is intended to supplement existing federal and state laws and regulations.
C. This chapter shall not apply to hand loading of small arms ammunition for personal use and not for resale.

5.11.62 Dealers, Wholesale/Retail sale of explosives.
Persons intending to act as dealers, and/or in the wholesale or retail activity of explosives shall:

A. Possess an appropriate federal license from the Bureau of Alcohol, Tobacco and Firearms.

B. Possess any appropriate required licenses from the State of New Hampshire where applicable.

C. Apply for and obtain a permit from the Fire Chief for the storage, use, possession and/or sale of explosives prior to said activity. This permit may only be issued upon proof of the applicant's possession of all federal and state approvals, licenses, permits etc.

D. No permit for the wholesale or retail activity of explosives shall be issued unless all necessary other approvals are received by the Town of Milford to include, but not be limited to, compliance with all planning, zoning, building, health, fire and life safety requirements.

E. The sale of explosive materials within the Town of Milford shall be prohibited when such sale presents undue hazard to life and property as determined by the Fire Chief.

5.11.63 Blaster's license required.

A. No person may load or fire explosive materials unless such person or his supervisor is a licensed blaster in conformance with the rules and regulations promulgated under RSA 158:9 of the State of New Hampshire.

B. Proof of said license shall be provided upon request of the Fire Chief.

5.11.64 Permit required.

A. No person shall use explosives within the Town of Milford without first obtaining the proper permit which authorizes him to use such materials.

B. The authorized agent or person conducting an operation or activity requiring the use of explosive materials shall obtain a permit to use explosive materials and shall be responsible for the results and any other consequences of any loading and firing of explosive material and shall permit the loading and firing to be performed or supervised only be a licensed blaster.

5.11.65 Permit applications; fees; pre-blasting conference; renewal.

A. Application for permit or its renewal shall be made to the Fire Chief on forms provided by him and shall contain such information as may be required.

B. Applications shall have attached proof of the following:

1. State of New Hampshire license to use, purchase, and transport explosive materials.
2. State of New Hampshire certificate of competency to conduct blasting operations.
3. An original certificate of insurance showing minimum coverage of $1,000,000 bodily injury and $500,000 property damage by a carrier authorized by the State of New Hampshire Insurance Commissioner to do business in the State of New Hampshire.
4. The blaster's license of the person in charge of or supervising the use of explosives.

C. Applications must be received by the Fire Chief at least five (5) business days prior to the estimated start date of the blasting operations.

D. A fee shall be assessed for each permit. Checks shall be made payable to the Town of Milford Fire Department and must be received by the Fire Department prior to permit approval and issuance. The permit fees shall be established by the Board of Selectmen of the Town of Milford.

E. Pre-blasting conferences may be scheduled by the Fire Chief prior to the approval of the permit application. Conference attendees may include, but not be limited to, representatives of the blaster, other town officials, and/or individuals likely to be affected by blasting operations. The Fire Chief may require a pre-blasting conference based upon the following criteria;

1. Overall size and scope of the project and/or site.
2. Anticipated duration of the blasting operation.
3. Proximity to abutters, important utilities or facilities.

F. If an application for renewal of a permit is filed after the expiration of the old permit, it shall be considered as an application of a new permit.

5.11.66 Permit restrictions.

A. No permit shall be assigned or transferred.

B. Approved permits shall be dated and be valid for no more than sixty (60) days from the date of issue.

F. The permit expiration date shall be no later than the expiration date of the blaster's insurance certificate and certificate of competency.

G. The permit shall bear the name and address of the person who applied for the permit, the name and address of the person(s) with a blaster's license who will supervise the use of explosives and the signature of the approving authority.

5.11.67 Denial, revocation or suspension of permit.

A. A permit for use of explosive materials may be denied, revoked or suspended for any of the following reasons:

(1) Noncompliance with any order of the issuing authority.

(2) If it is determined that any applicant or permit holder was or is under the influence of any drug (prescription or nonprescription) or alcohol that may have impaired their judgment or ability to transport, store, possess or use any explosive material under the jurisdiction of the Town of Milford in a safe and prudent manner while operating under such permit, their permit to operate in the Town shall be suspended immediately. The Fire Chief shall contact the Milford Police Department and the New Hampshire Department of Safety if he feels that any applicant or permit holder has or is suspected of violating this, or any part of this chapter, because they may have been or were impaired by any drug(s) or alcohol. No permit shall be reissued until the matter is fully investigated and the Fire Chief's office provided with the findings of any investigation into the matter.

(3) Proof that the permit holder or applicant suffers from a mental or physical defect that would interfere with the safe handling and use of explosive materials.

(4) Violation by the applicant or permit holder of any provision of any law or regulation relating to the explosive materials or proof that false information was willfully given or a misrepresentation was willfully made to obtain the permit.

(5) Determination by the Fire Chief that blasting operations pose a hazard to the health, safety, or property of any person, or, have or will cause an unnecessary nuisance to any person.

(6) For other good cause.

B. Notification; hearing.

(1) In any case where the Fire Chief determines that it is appropriate to deny a permit he shall promptly notify the applicant. Said notice will set forth specific basis for the denial and state that upon written request, a hearing before the Chief will be held within ten (10) business days after the date of receiving this request. Following said hearing, the Chief will make a final determination as to whether to grant or deny the applicant a permit.

(2) In any case where the Fire Chief determines that it may be appropriate to revoke a permit from a permit holder, he shall promptly notify the applicant that his permit is temporarily suspended pending a hearing. Said notice will set forth specific basis for the suspension and anticipated revocation and state that, upon written request, a hearing before the Chief will be held within ten (10) business days after receiving the request. Following said hearing, the Chief will make a final determination as to whether to revoke the permit.

(3) Within fifteen (15) business days after such hearing, the Fire Chief shall state his findings and conclusions in writing and transmit a copy to the applicant and former permit holder.

(4) Upon notice of the revocation or suspension of any permit, the former permit holder shall immediately surrender to the Fire Chief the permit and all copies thereof.

5.11.68 Licenses and permits available for public inspection; protection of permits.

A. Licenses or copies thereof to deal in explosive materials shall be kept available for inspection at each place of operation.

B. A permit to blast or copies thereof shall be kept available for inspection at each place of operation.

C. Permit holders shall take every reasonable precaution to protect their permits from loss, theft, defacement, destruction, or unauthorized duplication, and any such occurrence shall be immediately reported to the Fire Chief.

5.11.69 Recordkeeping and reporting.

A. A holder of a permit to use explosive materials shall make a record of all operations within the Town of Milford. Such record shall be made available to the Fire Chief upon request and shall be retained for five years.

B. All persons holding a blasting permit shall make daily records of each blast that at a minimum contains the information required by the current version of the Milford Fire Department's Record Requirements for Blasting, Appendix B. These records shall be retained for five years.

C. The Fire Chief shall be notified promptly by any permit holder of a change in business address or telephone number and home address if applicable.

D. The theft or loss of explosive materials shall be reported immediately to the Fire Chief and to the Milford Police Department.

E. Records made and kept pursuant to regulations promulgated by any federal or state agency need not be duplicated to satisfy the requirements of this section.

5.11.70 General regulations.

A. The conduct of all blasting operations shall be governed by the New Hampshire Code of Administrative Rules Chapter Saf-C 1600.

B. In the case of conflicting rules or regulations, the most stringent rule or regulation shall apply.

C. While explosive materials are being handled or used, smoking shall not be permitted, and no one near the explosive material shall possess matches, open flame or fire or flame producing devices, except that the blaster may possess a device for the specific purpose of igniting safety fuses.

D. No one shall handle explosive materials while under the influence of alcohol, narcotics, or other substances that may impair one's judgment.

E. For all blasts, the blaster shall exercise precautions to prevent injury to persons and damage to property and to prevent earth vibrations and atmospheric sounds from exceeding regulatory limits.

F. When conducting blasting operations, the holder of the permit shall use reasonable precautions, including but not limited to, warning signals, flags, barricades or mats as may be required or appropriate to maximize safety.

G. Blasting operations shall be conducted during daylight hours only. Basting operations shall not take place on weekends or holidays unless specifically approved by the Fire Chief.

H. No open faced quarry blasting shall take place on any overcast day. Overcast weather shall be determined by the Milford Fire Department.

I. No explosive materials shall be intentionally abandoned in any location for any reason, nor left in such a manner that they may be obtained by children or other unauthorized persons. All unused explosive materials shall be returned to proper storage facilities.

J. Explosive materials shall be loaded and used in a manner that is consistent with any recommendations or instructions of the manufacturer for that explosive material.

K. The use of blasting pads/mats shall be used for all blasting operations to cover all exposed bedrock or locations with less than two feet (2') of covered materials in the blast area. This does not to apply to quarry blasting operations.

L. The use of soil shall be used to berm all open faces. The soil depth shall be at least three feet (3'). This does not apply to quarry blasting operations.

M. Transportation, storage and possession of explosive materials in the Town of Milford shall be governed by the New Hampshire Code of Administrative Rules, Chapter Saf-C 1600 Explosives.

5.11.80 Notification.

A All property owners and occupants subject to a pre-blast survey shall be notified in writing by U.S. Certified Mail Return Receipt Requested, , of the pre-blast survey activity and impending blasting operations by the blasting company or his duly authorized representative. This notification shall consist of the name of the blasting company, contact telephone number for the blasting company and estimated duration of the blasting operation. The intent of this written

notification is to give the property owner/occupants advance notice and explanation of the pre-blast survey. A list of all property owners and occupants who receive this notification shall be attached to the blasting permit application and submitted to the Fire Chief.

B. In the event a pre-blast conference is scheduled the blasting company or his duly authorized representative shall notify all property owners and occupants of the date, time and location of the pre-blast conference in writing. This notification shall be given by U.S. mail at least seven (7) days in advance of the pre-blast conference and shall be given to all parties subject to a pre-blast survey.

C. Persons intending to conduct blasting operations within the Town of Milford shall submit written notification of such intent to the Chief of the Police Department. This notification shall be made no less than 24 hours prior to the estimated start date of the blasting operation.

D. The blaster shall notify the Milford Fire Department dispatch center (Milford Area Communication Center) no less than 1 hour prior to each blast. The blaster shall provide:

1. The name of the company conducting the blasting;
2. The address of the blasting operation;
3. The time of the blasting; and
4. The amount of the explosive material being used.

5.11.90 Preblast surveys.

Prior to conducting any blasting operations, the applicant or their agent shall conduct a preblast structural inspection condition survey of all existing structures and conditions on the site, adjacent to the site or in the vicinity of the site at no cost to the property owner or the Town of Milford. This survey shall extend to the structures or conditions as may be affected by the applicant's blasting operations. As a minimum, pre-blast structural inspection condition surveys shall be performed on all structures, including but not limited to, homes, foundations, driveways, roadbeds, swimming pools, wells, and mobile homes within 500' radius of the blasting hole(s). The permit applicant as well as the owner of the property being surveyed shall sign all such surveys once completed. If an owner refuses to allow for or sign a pre-blast survey form for whatever reason the applicant shall note this on the form. The applicant shall make at least three attempts to notify the owner of the need for such surveys, the last attempt shall include written notification and name and contact number of a person that they may contact.

A. The pre-blast structural inspection condition survey shall consist of a written description of the interior and exterior of each of the structures examined.

Descriptions shall locate any existing cracks, damage or other defects and shall include such information so as to make it possible to determine the effect, if any, of the blasting operations on the defect. Where significant cracks or damage exist, or for defects too complicated to describe in words, photographs shall be taken. A good quality videotape survey with appropriate audio description of locations, conditions, and defects can be used in lieu of a written form. Prior to the start of the work, a copy of the pre-blast condition survey shall be submitted to the Fire Chief and the homeowner or occupant.

B. The individual person conducting the survey shall give written notice to the owner of the property concerned and tenants of the property. This notice shall state the dates on which the surveys are to be conducted. Copies of all notices shall also be provided to the Fire Chief.

5.11.100 Blasting operations.

A. During the time that holes are loaded or are being loaded with explosives, blasting agents or detonators, the blast site shall be barred to all but those authorized personnel engaged in the drilling and loading operations or otherwise authorized to enter the site. The blast site shall be guarded or barricaded and posted.

B. After loading for a blast is completed, and before firing, all excess explosives materials shall be removed from the area and returned to the proper facilities.

C. As soon as practical after all blast holes are connected, prior to connecting to a source of initiation, such as a blasting machine, and until the shot has been fired and subjected to a post blast examination, the blast area shall be guarded or barricaded and posted or flagged against unauthorized entry.

5.11.101 Warning required.

A. No blast shall be fired until the blaster in charge has made certain that all surplus explosive materials are in a safe place, all persons and equipment are at a safe distance or under sufficient cover and that an adequate warning signal has been given.

B. The blaster shall inform the Fire Chief of the method by which a signal is sounded and the type of signal prior to starting the blasting operations.

5.11.102 Supervision of operations.

A. Loading and firing shall be performed or supervised only by a person possessing an appropriate blaster's permit.

B. The Fire Chief may at his discretion monitor at or near the blast site any blasting operations conducted within the Town of Milford.

C. If making the required one hour notification (5.12.70 C) the blaster is informed that the blast will be monitored, the blaster shall delay initiation of the shot until such time as the Fire Department representative is in position to monitor the blast.

5.11.103 Seismographic monitoring.

A. The Fire Chief may, at his discretion, require that seismographic monitoring be conducted by the blaster for any or all blasts initiated.

B. The location of seismographic equipment for tests may be determined by the Fire Chief in coordination with the blaster.

C. The seismographic instrumentation shall, at a minimum, meet the specifications as outlined by the Milford Fire Department in Appendix A. The Chief has the option of requiring that the original seismographic strip chart, digital seismographic data and calibration be provided.

D. All seismographic test results shall be made available in writing to the Fire Chief upon request. The Chief has the option of requiring that the original seismographic strip be provided.

5.11.110 Complaints.

A. The Fire Chief shall have the responsibility of coordinating all activities relative to complaints received concerning blasting operations within the Town of Milford.

B. Complaints received may be grouped into two categories:

1. Complaints of an informational nature or of a nuisance nature relative to blasts.
2. Complaints wherein possible damage is claimed as a result of blasting operations.

C. All complaints shall be submitted in writing to the Fire Chief on the form entitled "Blasting Complaint Form" attached at the end of these Rules and Regulations.

5.11.111 Nuisances.

A. Complaints of an informational nature or reporting a nuisance factor relating to blasting operations shall be handled by the Fire Chief. The Chief shall contact the complainant in a timely manner and attempt to resolve the complaint. In the

event that the complainant is not satisfied after contact by the Chief, the Chief shall require the blaster or blasting company to contact the complainant directly.

B. If, in the determination of the Fire Chief, sufficient complaints have been receive in reference to a specific blasting operation, the Fire Chief may direct such actions as may reduce the possible nuisance factor. Such actions may include, but not be limited to, reductions in the amount of explosive materials used, change in the time of the blast initiation and monitoring of blasts by noise level or earth vibration equipment to determine the extent of existence of the nuisance factor.

5.11.112 Damage complaints.

A. Complaints received by the Fire Department which allege damage to property as a result of blasting operations shall be reported immediately to the Fire Chief.

B. The complainant shall be contacted directly by the Fire Chief to ascertain pertinent information relative to the alleged damage.

C. The complainant shall also receive written instructions outlining the procedures to follow in order to seek compensation for possible damage.

D. The Fire Chief may elect to inspect the alleged damage and is authorized to document and/or photograph such evidence as he deems necessary.

E. If in the determination of the Fire Chief, the blaster the blasting company or their insurance representatives are not dealing with the complainant in a satisfactory manner, the Chief may exercise any option provided under this Code, including ordering suspension of blasting operations until such time as a satisfactory resolution is attained.

5.11.120 Manufacture of explosives.

The manufacture of explosives within The Town of Milford shall be prohibited.

These regulations are established by the authority granted to me in accordance with New Hampshire State Law, RSA 154:18 and shall take effect on July 1, 2007

_____
Francis X. Fraitzl, III
Fire Chief
Town of Milford

July 19, 2002 (Pauley)
Amended: February 16, 2007 (Pauley)
Amended: May 1, 2007

APPENDIX A

Seismographic Instrumentation Minimum Specifications

The seismographic instrumentation shall at a minimum meet the following specifications:

A. Capability to measure, display and record digitally three mutually perpendicular components of particle velocity.

1. Frequency response of 8 to 150 Hz
2. 12-bit A/D converter
3. Trigger levels from .02 to .25 ips.
4. Particle velocity range of 0.00 to 9.00 ips.
5. Digital storage capacity of 100 events.
6. Analysis capabilities for OSM alternative criteria.
7. Printing of records on a permanent strip chart.

B. The seismograph shall have been calibrated within 12 months of any blast monitored by it, and, such calibration shall been performed with standards traceable to NIST.

MILFORD FIRE DEPARTMENT
EXPLOSIVES AND BLASTING REGULATIONS
APPENDIX B

Records Requirements for Blasting

A. The following Records Requirements for Blasting Operations shall be adhered to by all individuals and companies that perform blasting operations or other operations utilizing explosives in the Town of Milford. Any violation shall result in the immediate suspension of the individual's or company's blasting privileges in the Town of Milford.

B. Each holder of a blaster's permit shall keep a record of explosive material fired or otherwise disposed of for all operations. The records shall be kept for a minimum of five years, and they must be made available immediately upon the request of the Fire Chief. These records shall include:

1. A daily log which shall contain:

    a. The manufacturer's name.

    b. The type, size and identification number of the explosives.

2. A record of each blast completed prior to or immediately following detonation, that includes the following:

    a. Name and certificate of competency number of the person setting off the blast.

    b. The date, time and location of the blast.

    c. Total amount of explosive detonated.

    d. Amount of explosive in each hole.

    e. Amount, type and delay time of initiators.

    f. Maximum weight of explosive used in each delay period.

    g. Diameter of each hole and the distance between the last loaded explosive and the surface of the hole.

    h. Distance between the closest explosive and nearest structure.

    i. Type of matting or cover used to contain fragments and to prevent particles from being discharged in the direction of workers and the general public.

j. Whether vibration recording instruments were used or the scaled distance of 50 was followed.

k. Written description or diagram showing the:

1. Location and spacing of loaded holes.

2. Location and amount of each delay period.

3. Location of blast site and distance to:

   a. The nearest structures.

   b. Overhead wires.

   c. Underground pipes or wires.

   d. Highways which are close enough to be affected by ground vibration or air blast.

4. Location of and the distance from the blast site to the vibration recording instruments if used.

Milford Fire Department
Explosives and Blasting Application

Date _____

Company requesting permit _____

Company Address _____

_____

Company Phone Number _____

Location of Blasting _____

Survey Required Yes _____ No _____

Estimated start date of blasting operations _____
(at least 5 business days from the Milford Cabinet's Thursday Edition)

Property Owner _____

Property Owner Address _____

Property Owner Phone Number _____

Blasting must be conducted with compliance to State Law Rules and Regulations, BOCA Basic Fire Prevention Code 1993, Article 30 and the Town of Milford Rules, Revised 4/1/97.

(Milford Fire Office Use)

_____

_____

_____

_____

BLASTING DAMAGE COMPLAINT FORM

PROPERTY OWNER INFORMATION

Date of Incident: _____ Time of Incident: _____

Location of Incident: _____
(town)

Address of Structure: _____ Type of Structure: _____
(street)

Property Owner's Name: _____ Phone Number: _____

Property Owner's Address: _____
(Address, City, State, Zip)

Complainant's Name if Different: _____ Phone Number: _____

Complaint's Address if Different: _____
(Address, City, State, Zip)

Did the property have a Pre-Blast Survey prior to the start of blasting? YES NO

DESCRIPTION OF ITEM(S) OR AREA OF ALLEGED DAMAGE

_____
_____
_____
_____
_____
_____
_____
_____
_____
_____

This form **must be returned** to the head of the Fire Department **within 30 days** of the alleged incident)

CERTIFICATION OF DAMAGE- PLEASE READ AND SIGN

I declare under the penalty of perjury that the statements and information provided herein are true as of the date of this complaint. I am aware that there are penalties for submitting false information including possible fines, civil penalties and imprisonment.

Signature of Property Owner: _____ Date Signed: _____

APPENDIX VI: FIRE CISTERN REQUIREMENTS

Milford Fire Department

Fire Cistern Requirements

April 1, 2010

I. Applicability

A. These requirements shall apply to all new commercial developments and residential subdivisions that are not served by municipal water and/or not having adequate water to provide year round fire protection as determined by the Fire Chief or designee.

II. Permits

A. A permit to install shall be obtained from the installation of each cistern. The permits shall be obtained from the Milford Fire Department.

B. A fee of 75.00 dollars for each permit shall be paid at the time of application.

III. Plans

A. Four (4) sets of plans, including manufacture literature shall be submitted for each cistern to be installed for review and approval by the Milford Fire Department. The plans shall include the following:

- Must be signed and stamped by a NH registered professional engineer.
- Cistern Design in accordance with Milford Fire Department Requirements, NFPA 1142, UL and ASTM standards.
- Site plan showing the location of cistern and easement for cistern maintenance and possible future removal. Easement shall be a minimum of ten (10') feet on all sides. All easements shall also be on file with the Community Development Office and Planning Board.

IV. Cistern locations

A. All cisterns shall to be in place and **fully operational** prior to any combustible materials being stored on site or building permits being issued. For developments that are built in phases, fire cisterns shall be in place and fully operational for the phase currently under development, prior to combustible materials being stored on site.

B. The location of ALL cisterns shall be reviewed and approved by the Fire Department prior to the installation of any cistern as part of an approved site or subdivision plan. Any cistern that is installed prior to the approval of the Fire Department or installed in the wrong location shall be excavated, removed and installed in the proper location unless approved by the Fire Chief and Planning Board as necessary. The work shall be done by a qualified technician and the complete cost of this work shall be borne by the contractor, developer and/or owner.

C. Cisterns shall be located no more than 2000 feet truck travel distance from the nearest lot line of the furthermost lot, spaced every 2000 feet throughout the development. The

spacing of cisterns may be increased or eliminated if the contractor, developer and/or owner installs an NFPA 13,13R or 13D compliant sprinkler system in the facility or individual houses within the development. Adjustments to the cistern spacing requirement may be made by the Fire Chief or designee on a case by case basis.

D. The contractor, developer and/or owner shall be responsible for annual maintenance of all cisterns including, but not limited to snow removal, until the roadway is officially accepted by the Town of Milford. If not maintained, the Town of Milford reserves the right to bill the contractor, developer and/or owner for maintenance or snow removal.

V. Vehicle Pad

A. The vehicle pad and approach shall be constructed of a hard, all weather surface such as bituminous pavement or concrete, meeting NHDOT standards and Town of Milford requirements.

B. The vehicle pad shall be of sufficient length to permit easy access to Suction and Fill piping when the fire apparatus is set forty five (45°) degrees to the road.

C. The pitch of the shoulder and vehicle pad from the edge of the pavement to the pumper suction connection shall be one percent (1 %) to six percent (6%) downgrade.

D. A no parking sign shall be placed at the vehicle pad.

VI. Cistern Specifications

A. All cisterns shall be single wall fiberglass or precast concrete.

B. The minimum size capacity for a fire cistern shall be 30,000 gallons.

C. All cisterns shall be trouble free and carry a lifetime warranty of 50 years.

D. All cisterns shall be capable of flowing 1000 gpm for 75% of the cistern capacity.

E. Protection from vehicular traffic shall be provided for all cisterns. Bollards shall be placed along the entire length of the vehicle pad. Bollards shall be a minimum of steel, concrete reinforced 8” diameter. Bollard shall be painted with a rust inhibitor and then painted red.

F. Both Suction and Fill piping shall be supported by either the top of the tank or below the frost line.

G. All horizontal piping shall be pitched towards the tank to allow for drainage.

H. All exterior piping shall be painted with a rust inhibitor and then be painted red.

I. A metal hydrant marker outfitted with white reflective tape shall be installed on the suction pipe.

J. The draft pipe shall be supplied with an anti-vortex plate a minimum of sixteen square inches (16” x 16”). The anti-vortex plate shall be attached to the bottom of the tank, a minimum of six (6”) inches off of the tank floor.

K. All cisterns are to be designed so they will not float when empty. This shall be shown on the plans submitted.

L. The bottom of the suction piping to the pumper connection shall not exceed fourteen (14’) vertical feet in distance.

M. Vent Pipe will be three (3”) inch Schedule 40 Steel Pipe. The pipe will have a bug resistant screened opening and will be positioned to minimize condensation buildup. The height of the vent pipe is to be determined by approved submittal drawings.

N. Fill Pipe will be four (4”) inch Schedule 40 Steel Pipe. The fill pipe will terminate above the tank with a four (4”) inch Storz connection with cap. The pipe shall be thirty six (36”) inches above grade.

O. The suction pipe will be six (6”) inch Schedule 40 Steel Pipe. Above the tank the pipe will remain vertical until a ninety (90°) degree long sweep establishes a horizontal direction. The height of the suction pipe above the cistern is to be thirty six (36”) inches above finished grade. The pipe will then be reduced to a final four and a half (4 ½”) inch National Hose male thread and must be capped. Inside the cistern the suction pipe will extend to six (6”) inches of the floor of the cistern. The taper of the pipe shall not allow air bubbles to form.

P. The elevations of all cistern piping are based on the finished grade of the approach and vehicle pad which must be shown on the submitted plans.

1. Precast Reinforced Concrete Cisterns

- All precast reinforced cisterns shall be waterproofed in accordance with manufacturer’s specifications and these requirements.
- The entire cistern shall be rated for highway loading.
- Surface Loads: Tank shall withstand surface H-20 axle loads when properly installed according to manufacturer's installation instructions.

2. Single Wall Fiberglass Cisterns

- All single wall fiberglass cisterns shall be installed in accordance with manufacturer's specifications and these regulations.

- The entire cistern shall be rated for highway loading.

VII. Backfill of Tanks

A. All construction, backfill and grading material shall be in accordance with proper construction practices and acceptable to the Fire Chief or designee.

B. Bedding for the cistern shall consist of a minimum of twelve (12") inches of $^{3}/_{4}$ inch to $1^{1}/_{2}$ inch crushed, washed stone, compacted. No fill can be used under the stone.

C. All backfill material must be screened gravel with stones not larger than $1^{1}/_{2}$ inches and must be compacted to ninety five(95%) percent in accordance with ASTM D 1557, *Standard Test Methods for Laboratory Compaction Characteristics of Soil Using Modified Effort.*

D. All tanks will be backfilled with a one (1') foot blanket of clean sand around all sides the top of the cistern.

E. Backfill over the tank must have one of the following characteristics:

- Minimum four feet (4') of fill.

- The top and highest two feet (2') of sides of the cistern shall be insulated with vermin-resistant foam insulation and two (2') feet of fill.

- All backfill shall extend ten feet (10') beyond the edge of the cistern, and have a maximum of 3:1 slope, loamed and seeded.

VIII. Inspections

A. All inspections shall be performed by the Town of Milford Inspecting Engineer or designee and coordinated through Milford Fire Department

B. Inspections shall include the following:

- Rough excavation
- Tie down or strapping inspection
- Backfill Inspection
- Random compaction test
- Finish inspection
- Leakage test

- Fire Department Conditional Acceptance Test

IX. Testing

A. After backfilling of the tank and manway, and miscellaneous piping is installed, the fire cistern tank shall be leakage tested. The tank must be filled with potable water to within 1 inch of the top cover of the manway. The installer may allow the filled tank to sit for one (1) day prior to commencement of the test. The test duration will be seven (7) calendar days. The tank level measurements will be made and recorded by the Town of Milford's Inspecting Engineer or designee. The installer must provide the specified lock and key for use by the Town of Milford's Inspecting Engineer or designee, and the Milford Fire Department to secure the manway cover. The test is a zero leakage test. If after the seven day test leakage is verified, the tank and or components must be repaired to stop the leak. Any repairs made must be in accordance with manufacturer's specifications and acceptable to the Fire Department. Any repairs made to the tank must be done with prior written recommendation by the tank's manufacturer.

B. The Fire Department shall conduct a final Conditional Acceptance Test of the cistern which will consist of a fire apparatus pump pulling and maintaining a draft from the cistern for two (2) cycles of five (5) minutes each.

C. Refilling of the tank with potable water is the responsibility of the contractor, developer and/or owner. Tank shall remain filled once tested and accepted.

D. Once the final Conditional Acceptance Test has been successfully completed the Fire Department will conditionally accept the cistern. This conditional acceptance shall remain in place until the roadway is accepted by the Town of Milford.

E. The contractor, developer and/or owner shall be responsible for annual maintenance of all cisterns including, but not limited to snow removal, until the roadway is officially accepted by the Town of Milford. If not maintained, the Town of Milford reserves the right to bill the developer, contractor and/or owner for maintenance or snow removal.

Milford Fire Department Fire Cistern Inspection Sign Off

ALL FIRE DEPARTMENT INSPECTIONS SHALL BE SCHEDULED A MINIMUM OF 24 HOURS IN ADVANCE. ALL 3RD PARTY INSPECTIONS SHALL BE SCHEDULED A MINIMUM OF 48HOURS IN ADVANCE.

Cistern location: _____

Manufacture: _____

	Date	Performed by	Approved/Not Approve d
Excavation Inspection:			
Tie down Inspection:			
Finish Inspection:			
Backfill Inspection:			
Random Compaction Test:			
Leakage Test:			
Flow Test:			
Conditional Acceptance:			
Final Acceptance:			

Final acceptance of the cistern is granted upon acceptance of the road by the Town of Milford. Conditional acceptance will be granted upon successful completion of the Flow Test.

Parcel ID:
Map_____ Lot_____
❑ Paid with Permit ❑ Amount _____ ❑ Cash ❑ Check # _____ Office Use Only

Town of Milford, NH

FIRE CISTERN INSTALLATION PERMIT

❑ Single wall fiberglass ❑ Precast reinforced concrete

Location Of Work:	
Property Owner:	Owner's Phone #:
Description of Work:	

Make of Appliance:	
Size:	Location:

REQUIRED INFORMATION

Installer Name:		Daytime Phone #:	
Company:		Phone #:	
Address:	City:	State:	Zip:

Please submit 4 sets of plans.

Approved By: _____**Date:** _____
Milford Fire / Building Official

24 HOUR NOTICE Required for Fire Department inspections

(603) 249-0680

APPENDIX VII: RESIDENTIAL DRIVEWAY REGULATIONS

TOWN OF MILFORD, NEW HAMPSHIRE

RESIDENTIAL DRIVEWAY PERMIT REGULATIONS

Adopted August 19, 2008

Revised: March 30, 2010

DEPT. of PUBLIC WORKS
EQUAL & EXACT JUSTICE TO ALL
SETTLED 1738
INCORPORATED 1794
MILFORD, N.H.
MILFORD, N.H.

Table of Contents

SECTION II. PURPOSE 2
SECTION III. PERMIT 2
SECTION IV. ACCESS POINTS 2
SECTION V. DESIGN REQUIREMENTS 3
SECTION VI. EASEMENT AND BOND 4
SECTION VII. SEPARABILITY 5
SECTION VIII. ENFORCEMENT 5
SECTION IX. AMENDMENT 5
SECTION X. APPENDIX FIGURE 1: DRIVEWAY DETAIL 6
FIGURE 2: FLARE END DETAIL 7

SECTION I. AUTHORITY

The Town of Milford Planning Board hereby adopts the following regulation pursuant to its authority as set forth at RSA 236:13.V, and establishes that hereafter no driveway accessing private residential property to a public way in the Town of Milford shall be constructed without compliance with this regulation.

SECTION II. PURPOSE

In as much as driveways and entrances are in effect, intersections, they require certain controls as to size, location and construction in order to provide safe and efficient access to property fronting on the public way, as well as surface drainage in and around said driveway, and for the purpose of such control this regulation is enacted.

SECTION III. PERMIT

Anyone desiring to construct, alter, or relocate a driveway in order to obtain access to an existing public way or a proposed street or public way, shall first apply for and obtain a permit from the Director of Public Works. This permit shall provide for the construction or relocation of such driveway in accordance with the specifications provided in the driveway permit form, which is available at the Department of Public Works and Community Development offices. The driveway location as indicated on the approved septic plan is the ONLY driveway to be utilized unless the Director of Public Works or the Planning Board authorizes a change in writing. Permanent house numbers will be assigned by the Building Department at the time the driveway permit is issued and shall be located so as to be clearly visible from the roadway at start of construction.

SECTION IV. ACCESS POINTS

A. If a property is adjacent to a side road the access to the main road should be via the side road.

B. Curb cuts shall be limited to one per residential lot, except where the Director of Public Works has determined that a second cut is warranted. A scale drawing indicating the features necessitating the second access must be submitted for the DPW Director to make a determination. A second cut may be granted under the following conditions:

1. A second curb cut is necessary for access to a secondary use or structure, and the physical constraints of the lot, including natural features, unusual lot shape or size, or elevation change necessitates the second access.

2. A second curb cut is necessary to allow handicapped access for an individual who is a permanent resident of the property.

C. A permit is required from the Department of Public Works for any temporary access entrance. A bond in the amount of $1,500 may, at the discretion of the Director of Public Works, be required to guarantee restoration of the area disturbed by the temporary access.

D. Street areas and the public right-of-way shall be cleared daily of debris such as mud, stone, construction vehicles and equipment.

SECTION V. DESIGN REQUIREMENTS

A. The design of the proposed driveway construction shall conform in all aspects to the "Typical Drive Profile Controls" as shown in Appendix I, and the Department of Public Works, Infrastructure Design, Construction and Administration Standards. It is understood that the applicant shall confer with the Director of Public Works who shall determine specifications as to sloping, culverts, headwalls and other aspects of construction of said driveway only when it deviates from the typical profile and standards. The deviations shall be noted in writing on the Driveway Permit. Upon written application, the Director of Public Works may waive any of the design requirements when it is shown that strict compliance would cause undue or unnecessary hardship, so long as such waiver shall not result in any injury to the public health or welfare.

B. All driveways shall be a minimum of ten feet (10) in width. Entrances shall flare as it approaches the pavement to a maximum width of twenty four feet (24) measured at the existing edge of roadway.

C. Flat driveway side-slopes (4:1 to 6:1) are required to minimize hazards to vehicles, which leave the pavement for any reason. All paved roads shall require an asphalt apron from roadway to the property line, said apron being constructed of a minimum of three (3") inches of asphalt with emulsion applied at the joint with the town road.

D. All new driveways established to serve structures intended for human occupancy shall have a maximum grade of ten (10%) percent. The purpose of the maximum grade requirement is to ensure public safety and accessibility for emergency vehicles. This standard shall not apply to driveways intended to serve non-occupancy structures, such as utility service buildings, and other private ways intended for purposes such as logging, silviculture, agriculture, and recreational access.

E. All driveways shall approach the edge of pavement at a grade of not more than 4% for a distance of no less than 20 feet.

F. All driveways shall intersect the Town's roadway at a perpendicular angle to the center line.

G. Where required, culverts shall be at least fifteen (15) inches in diameter and shall be constructed of reinforced concrete, high density polyethylene pipe or approved equal. The driveway will have a minimum of three (3) foot shoulders on each side where it meets the culvert.

H. Headwalls shall be constructed of either pre-cast or cast-in-place concrete. No stone and mortar headwalls shall be permitted. Where head walls are not applicable, pre-manufactured flares will be placed on each pipe end.

I. All season safe sight distance is defined as a line which encounters no visual obstruction between two points, each at a height of 3 feet, 9 inches above the pavement, and 10 feet from the back from the road pavement to

represent the critical line of sight between the operator of a vehicle using the access and the operator of a vehicle approaching from either direction.

J. Driveway Design features:

1. Drive way design features for all districts <u>except</u> Residential "A" and Open Space Conservation Subdivisions:

Maximum width at property line	24 feet
Minimum tangent between drives	100 feet
Minimum distance from intersection	100 feet

2. Drive way design features for Residential "A" utilizing both municipal sewer and water and Open Space Conservation Subdivisions:

Minimum tangent between drives	50 feet
Minimum distance from intersection	50 feet

3. Safe sight distance shall be compatible with the maximum speed limit posted on the road:

SPEED LIMIT (mph)	***SIGHT DISTANCE (feet)***
15 – 25 MPH	200 feet
26 – 35 MPH	300 feet
36 – 55 MPH	400 feet

J. In cases of rear lots with private ways to local streets, the above requirements for minimum tangent between drives and maximum frontage drives shall not apply.

SECTION VI. EASEMENT AND BOND

A. The applicant shall, at the discretion of the Director of Public Works, be required as a condition of the granting of the Driveway Permit, to provide to the Town of Milford, its successors or assigns, an easement for the purpose of entering upon the premises of the applicant to control or maintain surface drainage on the property and do all things necessary for, and incidental to, such drainage easement in question.

B. The applicant may be required to provide a bond to the Department of Public Works for a minimum of $1,500, or an amount necessary as security for the proper construction of any culverts, piping, ditching or other efforts incidental to and necessary for the proper discharge and control of surface drainage in and around the vicinity of the proposed driveway as well as the proper construction of the driveway entrance both on the property of the applicant or on the property of the Town of Milford as deemed necessary by the Director of Public Works .

D. Failure to begin construction within one year of application approval will render the driveway permit null and void. Failure to complete construction within one calendar year from date of posting of bond shall result in the automatic calling of same unless extended by the Director of Public Works.

E. Funds may be withdrawn from the bond by the Town of Milford and applied against the cost of said construction which the Town of Milford is obliged to complete. No funds shall be expended at any site in excess of the amount of the bond pertaining to said site.

SECTION VII. SEPARABILITY

The invalidity of any provision of these regulations shall not affect the validity of any other provisions.

SECTION VIII. ENFORCEMENT

The Milford Board of Selectmen and the Director of Public Works are charged with the power and authority to enforce the provisions of these regulations.

SECTION IX. AMENDMENT

These Regulations may be amended by the Planning Board following a noticed public hearing on the proposed amendment. All amendments will take effect upon approval by a majority of the Board and filed with the Milford Town Clerk.

Figure 1: Driveway Detail

DRIVEWAY CONSTRUCTION REQUIREMENTS:

1. ALL DRIVEWAYS CONNECTED TO TOWN ROADS MUST BE BUILT AND MAINTAINED BY THE HOMEOWNER OR HIS/HER REPRESENTATIVE IN ACCORDANCE WITH THESE SPECIFICATIONS.
2. DRIVEWAYS CAN NOT DIVERT OR INTERRUPT THE NATURAL OR DITCHLINE FLOW OF RUNOFF. IN MOST CASES, THIS CAN BE ACCOMPLISHED THROUGH THE INSTALLATION OF A REINFORCED CONCRETE PIPE OR CORRUGATED ALUMINUM METAL PIPE CULVERT (12" MINIMUM OR AS SPECIFIED HEREIN) UNDER THE DRIVEWAY WITH PROPER ALIGNMENT AND GRADE.
3. WHERE SHALLOW DITCHLINES EXIST AT THE CREST OF A TOWN ROAD OR NATURAL DRAINAGE COURSES DISCHARGE RUNOFF FROM THE TOWN ROADWAY, DRIVEWAYS MAYBE REQUIRED TO BE DEPRESSED AT A POINT BEYOND THE ROAD SHOULDER TO ACCOMODATE THE FLOW OF SURFACE WATER. (SEE TYPICAL DRIVEWAY PROFILE DETAILS BELOW).
4. LINE OF SIGHT SHALL COMPLY WITH SECTION V.H OF THESE STANDARDS
5. THERE SHALL BE NO PERMANENT STRUCTURE CONSTRUCTED, BELOW OR ABOVE THE FINISH GRADE, THAT IS CONTAINED WITHIN THE TOWN RIGHT-OF-WAY. IT SHALL BE THE APPLICANT'S RESPONSIBILITY TO DETERMINE THE LOCATION OF THE RIGHT-OF-WAY LINE (PROPERTY LINE).

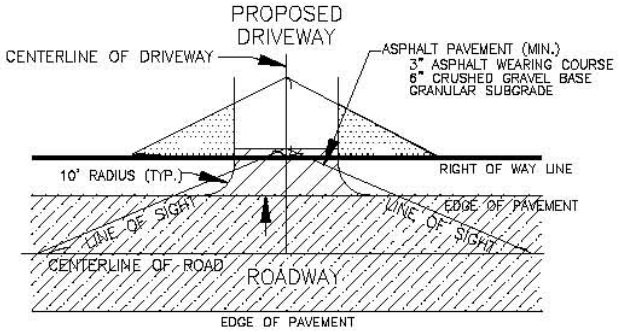

TYPICAL DRIVEWAY PLAN VIEW

NOT TO SCALE

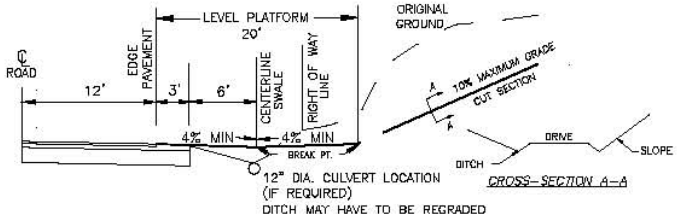

TYPICAL DRIVEWAY – CUT CROSS SECTION

NOT TO SCALE

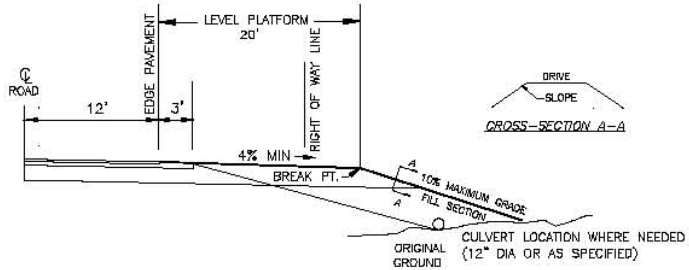

TYPICAL DRIVEWAY – FILL CROSS SECTION

NOT TO SCALE

EQUAL & EXACT JUSTICE TO ALL
SETTLED 1738
INCORPORATED 1794
MILFORD, N.H.

TYPICAL DRIVEWAY DETAILS

NOT TO SCALE

DEPARTMENT OF PUBLIC WORKS

rev. 6/16/08

DIG SAFE
CALL 811 BEFORE YOU DIG
UTILITIES UNDERGROUND PLANT DAMAGE PREVENTION SYSTEM

Figure 2: Flare End Detail

PIPE DIAMETER (INCHES)						
DIMENSION	10/12	15	18	24	30	36
A	42	41	49	59.5	88	88
B	14.5	19	22	28	36	43
C	33	34	43	48	63.5	66.5
D	6	6	6	6	6	6

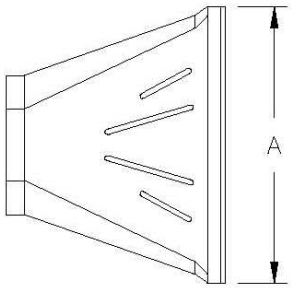

THE INVERT OF THE PIPE AND THE END SECTION SHALL BE AT THE SAME ELEVATION.

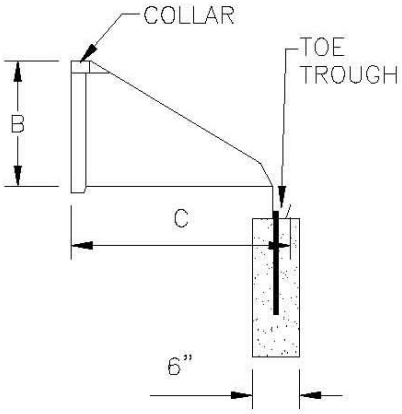

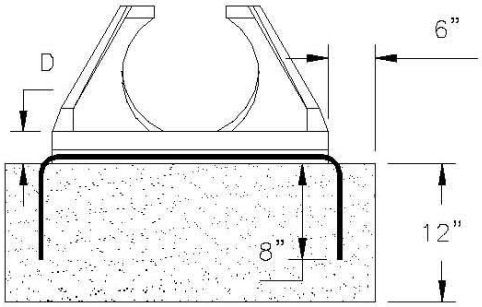

CONCRETE ANCHOR WITH REBAR TIE DOWN IN TOE TROUGH.

FLARED END SECTION – HDPE

HANCOR HI–Q FLARED END SECTION OR EQUAL

JUNE 6, 2002
SCALE: NONE